CONNECT AND PROTECT

Frame Type Plug-in Units

nVent
SCHROFF

Frame type plug-in units – Kits

OVERVIEW

MAIN CATALOG

Cabinets 1

Wall mounted cases 2

Accessories for cabinets and wall mounted cases . . 3

Climate control . . 4

Electronics cases 5

Subracks/ 19" chassis 6

Front panels, plug-in units 7

Systems 8

Power supply units 9

Backplanes 10

Connectors, front panel component system 11

Appendix 12

04807002

19" modules are mechanical components that serve to carry one or more circuit boards. The boards housed in a module are thus combined into a larger electronic function unit that is self-contained and testable. Mechanical dimensions conform to IEC 60297-3-101 / IEEE 1101.1/11 standards, i.e. the so-called 19" standard. These function units are integrated into the subrack or case; their dimensions likewise form a component of IEC 60297-3-101 / IEEE 1101.1/11.

The dimension obligations of the standard give only little freedom for individual design of frame type plug-in units. The aim is therefore to make optimum use of what freedoms regarding dimensions it does allow, e.g.

- to maximise the internal space of a plug-in unit and thus create maximum space for electronic components, or
- to ensure optimal EMC shielding with minimum loss of mounting space to the shielding components

Standards

- IEC 60297-3-101 / IEEE 1101.1/11

Width	5 HP		6 HP		7 HP		8 HP		10 HP		12 HP		14 HP		21 HP		28 HP		42 HP	
Height in U	3	6	3	6	3	6	3	6	3	6	3	6	3	6	3	6	3	6	3	6
Frame-type plug-in units PRO	–	–	–	–	–	–	x	x	x	x	x	x	x	x	x	x	x	x	x	x
Frame type plug-in units PRO with cooling fins	–	–	–	–	–	–	–	–	–	–	x	x	x	x	x	x	–	–	–	–
Frame-type plug-in units PRO with hood	x	x	x	x	x	x	–	–	x	x	x	x	x	x	–	–	–	–	–	–
HF frame-type plug-in units	–	–	–	–	x	–	–	–	x	–	x	–	x	–	x	–	x	–	–	–

Frame type plug-in units – Kits

OVERVIEW

FRAME-TYPE PLUG-IN UNITS TO HOUSE PRINTED BOARDS

- **For PCBs in euroboard format**
- **Kits or configuration from single components**
- **Front panels: unshielded or EMC shielded**

04808008

FRAME-TYPE PLUG-IN UNITS PRO

- Kit or configuration from single components in 3 U and 6 U, 8 ... 42 HP
- Shielded and unshielded versions
- Side panel with/without cooling fins
- For one or several PCBs or one or several connectors
- Various possibilities for combining the individual components

04808009

PLUG-IN UNITS PRO WITH HOOD

- Kit in 3 U and 6 U, 5 ... 14 HP
- Shielded and unshielded versions
- For one PCB with one connector

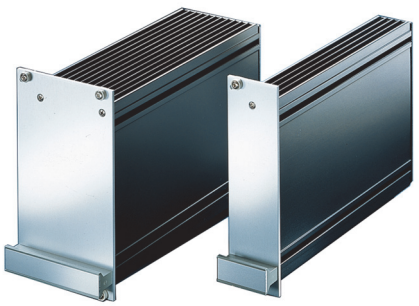

04892005

HF FRAME-TYPE PLUG-IN UNITS

- Kit or configuration from single components in 3 U, 7 ... 28 HP
- For shielding against high-frequency radiation
- Tube with cooling fins, in extruded aluminium
- For one or more PCBs, one or more connectors

SERVICEPLUS

e.g. individual configuration and assembly
e.g. modification (special colours)
e.g. customised solutions with modified frame-type plug-in units (special sizes)

Overview **7.64**

Introduction: Product features, product comparison **7.66**

Frame type plug-in units PRO

Frame type plug-in units PRO, shielded/ unshielded **7.68**

Frame-type plug-in units PRO with hood, unshielded **7.83**

HF plug-in units

Kits 3 U **7.87**

ServicePLUS configuration **7.88**

Accessories for plug-in units see page 7.52

Frame type plug-in units

THE NEW GENERATION

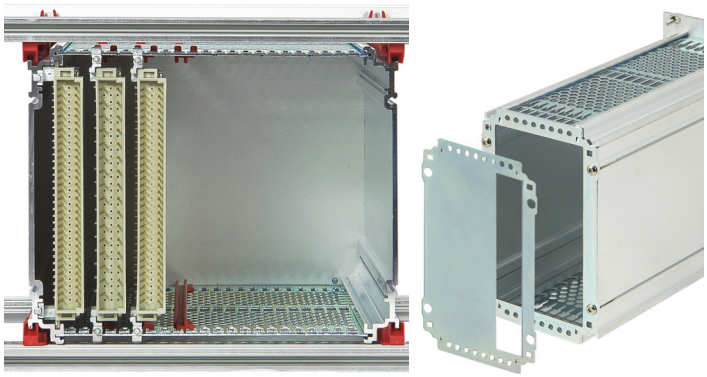

04808013 04808014

Rear view: frame type plug-in unit mounted in subrack

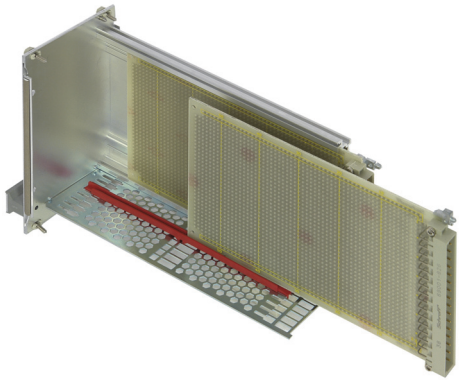

04808012

Board for slot 1 fixes to the side panel; further boards are fixed with guide rails

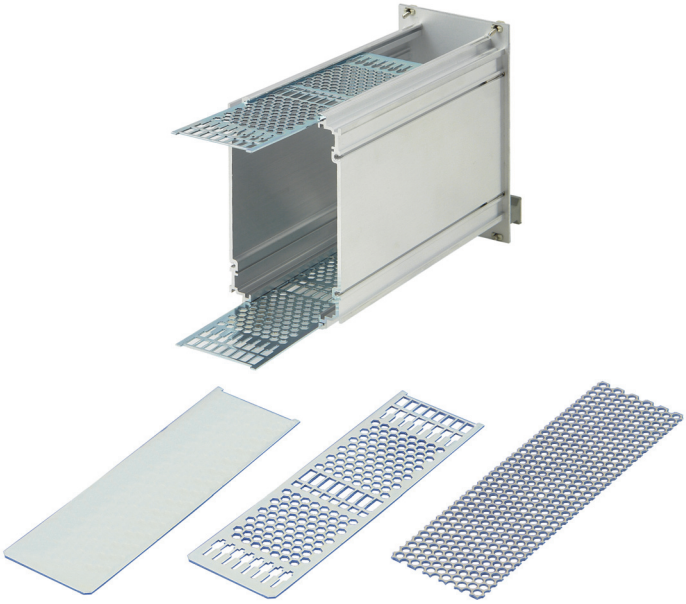

04808011 04808016

Sliding cover plates

The frame type plug-in units conform to IEC 60297-3-101.
They serve to house standardized PCBs and bulky components.
Because of the standardized assembly dimensions the frame type plug-in units can be mounted on guide rails, to be pushed into the subrack, in any order and using any plug-in unit.
The robust Al extrusion construction is especially suited for heavy components and the rough handling as "Field Replaceable Unit".

Details

The EMC version of the front panel was improved for frequencies over 1 GHz by using a conductive textile gasket and a robust U-shaped front panel

Push-in cover plates for quick fitting

Handles to be bolted-on from the front, easy mounting

Optimised air flow rate thanks to slender extruded side panels and large perforation areas in the cover plates, a perforation degree of up to 65 % is possible

3 cover plate versions (solid, perforated, perforated for guide rail mounting)

Width of frame-type plug-in units from 8 HP

To achieve a higher airflow rate, exceptionally slender guide rails are used to fix the boards

From slot 2 guide rails can be positioned in HP grid

Easy fixing of the boards in the frame-type plug-in units;
only 2 x 1 screws per board are needed to fix the boards

3 rear panel variants (solid, for one DIN connector, for multiple DIN connectors)

The flat rear panel enables simple reworking (e.g. punching); the rear panel can be removed without removing the PCBs

For better EMC contacting between rear panel and cover plate and to increase the stability of broad frame-type plug-in units, a rear panel retainer is available

Use of Torx screws for secure machine mounting

Note:
Frame type plug-in units cannot be combined with guide rails for CompactPCI or VME64x applications (width 4 HP)

Frame type plug-in units

COMPARISON: FRAME-TYPE PLUG-IN UNITS PRO/FRAME-TYPE PLUG-IN UNITS PRO WITH HOOD

Frame-type plug-in units PRO

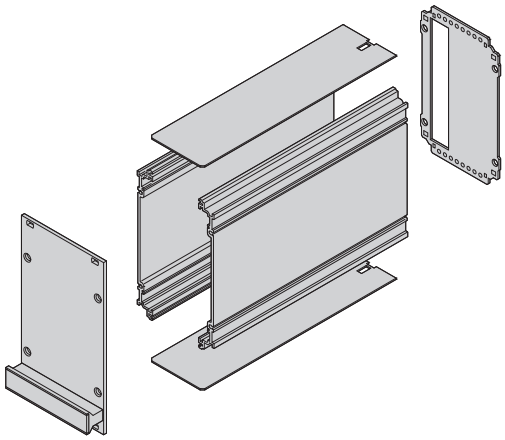

04808125

Frame-type plug-in units PRO with hood (shielded)

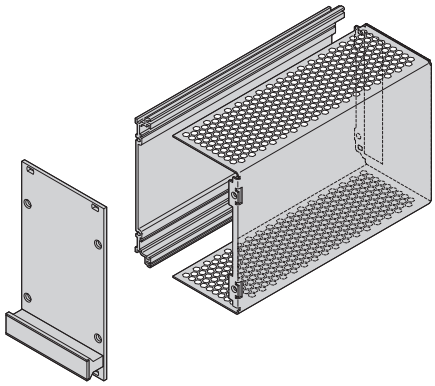

04808115

For one or multiple PCBs	Only for one PCB
Modular, at least 6 components (front panel, 2 side panels, 2 cover plates, rear panel)	Only 3 components (front panel, left hand side panel, hood with integrated rear panel)
Identical front panel and front handle	Identical front panel and front handle
Identical left hand side panel (Al extrusion)	Identical left hand side panel (Al extrusion)
Side panel on right hand side (Al extrusion)	Hood on right hand side (Al sheet)
Separate rear panel	Hood includes rear panel
Widths from 8 HP to 42 HP	Widths from 5 HP to 14 HP
Guiding in subrack/case with 4 guide rails; left and right side panels	Guiding in subrack/case with 2 guide rails; left side panel
3 rear panel variants (for one DIN connector, for multiple DIN connectors, rear panel without cut-out)	1 rear panel variant (for one DIN connector)

Part number in bold face type: ready for despatch within 2 working days
Part number in normal type: ready for despatch within 10 working days

Frame type plug-in units PRO

FRAME TYPE PLUG-IN UNITS PRO, 3 U KITS, FRONT PANEL SHIELDED (TEXTILE GASKET)

04811007

Illustration shows 12 HP width, side panel depth 167 mm

- Extruded side panels with groove to rigth and left, to insert a PCB (board position in accordance with standard in left side panel only)
- 2 board depths: 160 mm and 220 mm
- 2 cover plate versions
  - with perforation, for guide rails (5a, airflow rate approx. 60 %); please order guide rails separately
  - Without perforation (5b)
- 2 rear panel versions
  - With cut-out for one connector (3a, in accordance with EN 60603-2, DIN 41612)
  - With cut-out for multiple connectors (3b, in accordance with EN 60603-2, DIN 41612)

DELIVERY COMPRISES (Kit)

Item	Qty	Description
1	1	Front panel, U profile anodised, rear conductive, alignment pin pressed-in
2	1	Handle, grey, PPE, UL 94 V-1
3a	1	Rear panel, St, zinc-plated, 1.5 mm, with cut-out for one connector, incl. PCB fixing (slot 1)
3b	1	Rear panel, St, zinc-plated, 1.5 mm, with cut-out for multiple connectors, incl. PCB fixing (slot 1 and slot 2), incl. 2 guide rails rear panel fastener
3c	2	
4	2	Side panel, Al extrusion, colourless passivated, with groove for one PCB
5a	2	Cover plate, St, zinc-plated, 1.0 mm, with perforation
5b	2	Cover plate, St, zinc-plated, 1.0 mm, without perforation
6	1	EMC sealing (textile)
7	1	Assembly kit

ORDER INFORMATION

	Rear panel	Height	Width	Cover plate without perforation		Cover plate with perforation, for guide rails	
				04808055		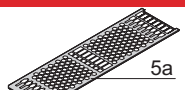 04808054	
				167 mm deep	227 mm deep	167 mm deep	227 mm deep
		U	HP	Part no.	Part no.	Part no.	Part no.
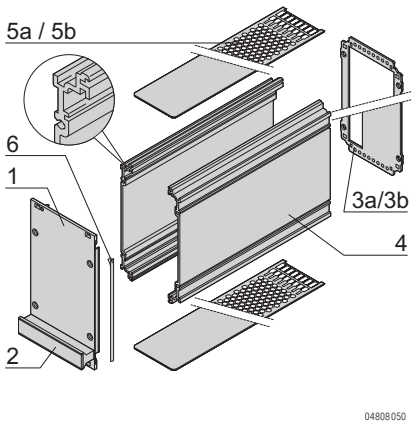 04808050	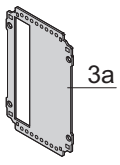 04808052	3	8	**24813-408**	**24813-458**	**24813-208**	**24813-258**
		3	10	**24813-410**	**24813-460**	**24813-210**	**24813-260**
		3	12	**24813-412**	**24813-462**	**24813-212**	**24813-262**
		3	14	**24813-414**	**24813-464**	**24813-214**	**24813-264**
		3	21	**24813-421**	**24813-471**	**24813-221**	**24813-271**
		3	28	**24813-428**	**24813-478**	**24813-228**	**24813-278**
		3	42	**24813-442**	**24813-492**	**24813-242**	**24813-292**
	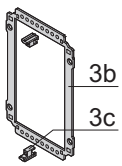 04808053	3	8	–	–	**24813-308**	**24813-358**
		3	10	–	–	**24813-310**	**24813-360**
		3	12	–	–	**24813-312**	**24813-362**
		3	14	–	–	**24813-314**	**24813-364**
		3	21	–	–	**24813-321**	**24813-371**
		3	28	–	–	**24813-328**	**24813-378**
		3	42	–	–	**24813-342**	**24813-392**

- Description of individual components, guide rails, dimension drawings, other combinations cover plates/rear panels etc. see from page 7.72

Frame type plug-in units PRO

FRAME TYPE PLUG-IN UNITS PRO, 6 U KITS, FRONT PANEL SHIELDED (TEXTILE GASKET)

Illustration shows 12 HP width, side panel depth 167 mm

- Extruded side panels with groove to rigth and left, to insert a PCB (board position in accordance with standard in left side panel only)
- 2 board depths: 160 mm and 220 mm
- 2 cover plate versions
  - With perforation, for guide rails (5a, airflow rate approx. 60 %),
  - please order guide rails separately
  - Without perforation (5b)
- 2 rear panel versions
  - With cut-out for one connector (3a; in accordance with EN 60603-2, DIN 41612)
  - With cut-out for multiple connectors (3b; in accordance with EN 60603-2, DIN 41612)
  - 6 U has cut-outs for connectors at top and bottom

DELIVERY COMPRISES (Kit)

Item	Qty	Description
1	1	Front panel, U profile anodised, rear conductive, alignment pin pressed-in
2	1	Handle, grey, PPE, UL 94 V-1
3a	1	Rear panel, St, zinc-plated, 1.5 mm, with cut-out for one connector, incl. PCB fixing (slot 1)
3b	1	Rear panel, St, zinc-plated, 1.5 mm, with cut-out for multiple connectors, incl. PCB fixing (slot 1 and slot 2), incl. 2 guide rails rear panel fastener
3c	2	
4	2	Side panel, Al extrusion, colourless passivated, with groove for one PCB
5a	2	Cover plate, St, zinc-plated, 1.0 mm, with perforation
5b	2	Cover plate, St, zinc-plated, 1.0 mm, without perforation
6	1	EMC sealing (textile)
7	1	Assembly kit

ORDER INFORMATION

	Rear panel	Height	Width	Cover plate without perforation		Cover plate with perforation, for guide rails	
				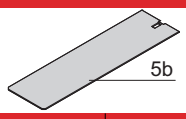 5b 04808055		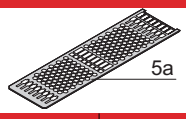 5a 04808054	
		U	HP	167 mm deep Part no.	227 mm deep Part no.	167 mm deep Part no.	227 mm deep Part no.
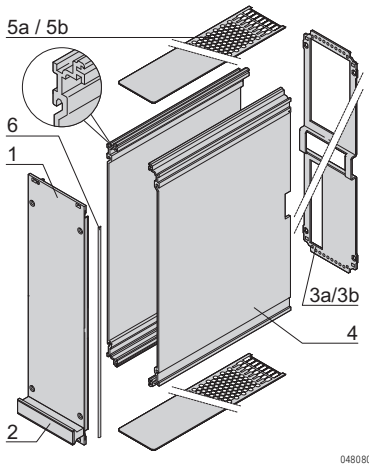 5a / 5b, 6, 1, 3a/3b, 4, 2 04808056	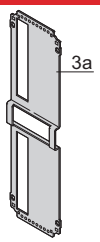 3a 04808117	6	8	**24813-908**	**24813-958**	**24813-708**	**24813-758**
		6	10	**24813-910**	**24813-960**	**24813-710**	**24813-760**
		6	12	**24813-912**	**24813-962**	**24813-712**	**24813-762**
		6	14	**24813-914**	**24813-964**	**24813-714**	**24813-764**
		6	21	**24813-921**	**24813-971**	**24813-721**	**24813-771**
		6	28	**24813-928**	**24813-978**	**24813-728**	**24813-778**
		6	42	**24813-942**	**24813-992**	**24813-742**	**24813-792**
	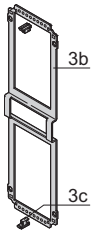 3b, 3c 04808059	6	8	–	–	**24813-808**	**24813-858**
		6	10	–	–	**24813-810**	**24813-860**
		6	12	–	–	**24813-812**	**24813-862**
		6	14	–	–	**24813-814**	**24813-864**
		6	21	–	–	**24813-821**	**24813-871**
		6	28	–	–	**24813-828**	**24813-878**
		6	42	–	–	**24813-842**	**24813-892**

- Description of individual components, guide rails, dimension drawings, other combinations cover plates/rear panels etc.
see from page 7.72

Part number in bold face type: ready for despatch within 2 working days
Part number in normal type: ready for despatch within 10 working days

Frame type plug-in units PRO

FRAME-TYPE PLUG-IN UNITS PRO, 3 U KITS, FRONT PANEL UNSHIELDED

Illustration shows 12 HP width, side panel depth 167 mm

- Extruded side panels with groove to rigth and left, to insert a PCB (board position in accordance with standard in left side panel only)
- 2 board depths: 160 mm and 220 mm
- 2 cover plate versions
  - with perforation, for guide rails (5a, airflow approx. 60 %); please order guide rails separately
  - Without perforation (5b)
- 2 rear panel versions
  - With cut-out for one connector (3a, in accordance with EN 60603-2, DIN 41612)
  - With cut-out for multiple connectors (3b, in accordance with EN 60603-2, DIN 41612)

DELIVERY COMPRISES (Kit)

Item	Qty	Description
1	1	Front panel, Al, 2.5 mm, anodised, cut edges plain
2	1	Handle, grey, PPE, UL 94 V-1
3a	1	Rear panel, St, zinc-plated, 1.5 mm, with cut-out for one connector, incl. PCB fixing (slot 1)
3b	1	Rear panel, St, zinc-plated, 1.5 mm, with cut-out for multiple connectors, incl. PCB fixing (slot 1 and slot 2), incl. 2 guide rails rear panel fastener
3c	2	
4	2	Side panel, Al extrusion, colourless passivated, with groove for one PCB
5a	2	Cover plate, St, zinc-plated, 1.0 mm, with perforation
5b	2	Cover plate, St, zinc-plated, 1.0 mm, without perforation
6	1	Assembly kit

ORDER INFORMATION

	Rear panel	Height	Width	Cover plate without perforation		Cover plate with perforation, for guide rails	
				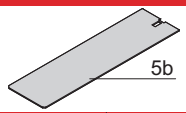 5b 04808055		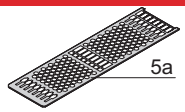 5a 04808054	
		U	HP	167 mm deep Part no.	227 mm deep Part no.	167 mm deep Part no.	227 mm deep Part no.
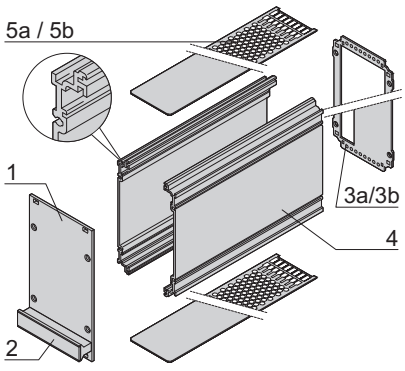 5a / 5b 1 2 3a/3b 4 04808051	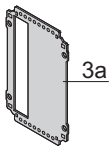 3a 04808052	3	8	**24812-408**	**24812-458**	**24812-208**	**24812-258**
		3	10	**24812-410**	**24812-460**	**24812-210**	**24812-260**
		3	12	**24812-412**	**24812-462**	**24812-212**	**24812-262**
		3	14	**24812-414**	**24812-464**	**24812-214**	**24812-264**
		3	21	**24812-421**	**24812-471**	**24812-221**	**24812-271**
		3	28	**24812-428**	**24812-478**	**24812-228**	**24812-278**
		3	42	**24812-442**	**24812-492**	**24812-242**	**24812-292**
	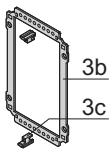 3b 3c 04808053	3	8	–	–	**24812-308**	**24812-358**
		3	10	–	–	**24812-310**	**24812-360**
		3	12	–	–	**24812-312**	**24812-362**
		3	14	–	–	**24812-314**	**24812-364**
		3	21	–	–	**24812-321**	**24812-371**
		3	28	–	–	**24812-328**	**24812-378**
		3	42	–	–	**24812-342**	**24812-392**

- Description of individual components, guide rails, dimension drawings, other combinations cover plates/rear panels etc. see from page 7.72

Frame type plug-in units PRO

FRAME TYPE PLUG-IN UNITS PRO, 6 U KITS, FRONT PANEL UNSHIELDED

Illustration shows 12 HP width, side panel depth 167 mm

- Extruded side panels with groove to rigth and left, to insert a PCB (board position in accordance with standard in left side panel only)
- 2 board depths: 160 mm and 220 mm
- 2 cover plate versions
  - with perforation, for guide rails (5a, airflow approx. 60 %); please order guide rails separately
  - Without perforation (5b)
- 2 rear panel versions
  - With cut-out for one connector (3a; in accordance with EN 60603-2, DIN 41612)
  - With cut-out for multiple connectors (3b; in accordance with EN 60603-2, DIN 41612)
  - 6 U has cut-outs for connectors at top and bottom

DELIVERY COMPRISES (Kit)

Item	Qty	Description
1	1	Front panel, Al, 2.5 mm, anodised, cut edges plain
2	1	Handle, grey, PPE, UL 94 V-1
3a	1	Rear panel, St, zinc-plated, 1.5 mm, with cut-out for one connector, incl. PCB fixing (slot 1)
3b	1	Rear panel, St, zinc-plated, 1.5 mm, with cut-out for multiple connectors, incl. PCB fixing (slot 1 and slot 2), incl. 2 guide rails rear panel fastener
3c	2	
4	2	Side panel, Al extrusion, colourless passivated, with groove for one PCB
5a	2	Cover plate, St, zinc-plated, 1.0 mm, with perforation
5b	2	Cover plate, St, zinc-plated, 1.0 mm, without perforation
6	1	Assembly kit

ORDER INFORMATION

	Rear panel	Height	Width	Cover plate without perforation		Cover plate with perforation, for guide rails	
				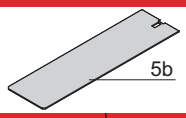 5b 04808055		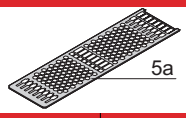 5a 04808054	
		U	HP	167 mm deep Part no.	227 mm deep Part no.	167 mm deep Part no.	227 mm deep Part no.
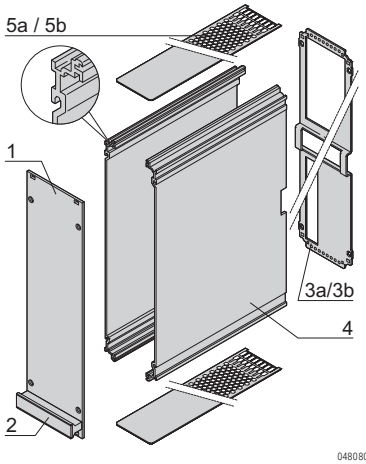 5a / 5b 1 2 3a/3b 4 04808057	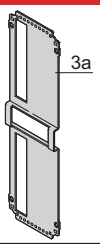 3a 04808117	6	8	**24812-908**	**24812-958**	**24812-708**	**24812-758**
		6	10	**24812-910**	**24812-960**	**24812-710**	**24812-760**
		6	12	**24812-912**	**24812-962**	**24812-712**	**24812-762**
		6	14	**24812-914**	**24812-964**	**24812-714**	**24812-764**
		6	21	**24812-921**	**24812-971**	**24812-721**	**24812-771**
		6	28	**24812-928**	**24812-978**	**24812-728**	**24812-778**
		6	42	**24812-942**	**24812-992**	**24812-742**	**24812-792**
	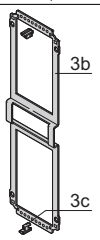 3b 3c 04808059	6	8	–	–	**24812-808**	**24812-858**
		6	10	–	–	**24812-810**	**24812-860**
		6	12	–	–	**24812-812**	**24812-862**
		6	14	–	–	**24812-814**	**24812-864**
		6	21	–	–	**24812-821**	**24812-871**
		6	28	–	–	**24812-828**	**24812-878**
		6	42	–	–	**24812-842**	**24812-892**

- Description of individual components, guide rails, dimension drawings, other combinations cover plates/rear panels etc.
see from page 7.72

Part number in bold face type: ready for despatch within 2 working days
Part number in normal type: ready for despatch within 10 working days

Frame type plug-in units PRO ServicePLUS

INDIVIDUAL COMPONENTS

FRONT PANELS, FRONT HANDLES

	Front panel	Shieldable front panel, U profile					Trapeziform handle, grey (without extraction function)	
	unshielded	Front panel	EMC shielding - textile, for front panel and 19" bracket/corner profile				Grey	Black
	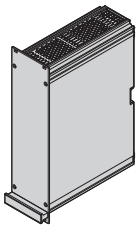 04808124	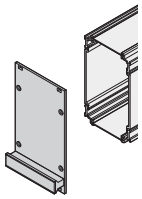 04808060	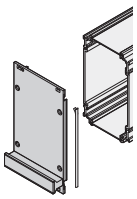 04808061	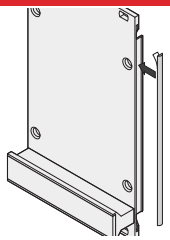 04808062			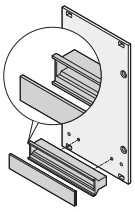 04808063	
Supplied quantity for assembly of 5 frame type plug-in units	Al, 2.5 mm, front anodized, rear anodized, cut edges blank	Al extrusion, alignment pin pressed-in, front anodised, rear conductive	always fixed laterally on the front panel, in the groove of the profile, textile gasket, core: foam, TPE foam; sleeve: textile cladding with CuNi coating, UL 94 V-0 temperature range -40 ... 70 °C		always fixed laterally on the front panel, in the groove of the profile, textile gasket, core: foam, silicon with hollow chamber; sleeve: textile cladding with CuNi coating, UL 94 V-0 temperature range -40 ... +85 °C		handle: PPE, UL 94 V-1; identification plate: Al, 1.5 mm, anodised, cut edges plain; please order clip separately (included in mounting kit for five plug-in units or individual parts) 7.75	
			Temperature range -40... +70 °C		Temperature range -40... +85 °C			
	1 piece (SPQ 5)[1]	1 piece (SPQ 5)[1]	PU 10 pieces	PU 100 pieces	PU 10 pieces	PU 100 pieces	1 piece (SPQ 5)[1]	1 piece (SPQ 5)[1]
	3 U Height PCB depth 160 mm							
8	**34812-108**	**34813-108**					**20808-062**	**20808-083**
10	**34812-110**	**34813-110**					**20808-004**	**20808-085**
12	**34812-112**	**34813-112**					**20808-064**	**20808-086**
14	**34812-114**	**34813-114**	**21101-853**	**21101-854**	**21102-853**	**21102-854**	**20808-065**	**20808-087**
21	**34812-121**	**34813-121**					**20808-066**	**20808-088**
28	**34812-128**	**34813-128**					**20808-067**	**20808-089**
42	**34812-142**	**34813-142**					**20808-068**	**20808-091**
	PCB depth 220 mm							
8	**34812-108**	**34813-108**					**20808-062**	**20808-083**
10	**34812-110**	**34813-110**					**20808-004**	**20808-085**
12	**34812-112**	**34813-112**					**20808-064**	**20808-086**
14	**34812-114**	**34813-114**	**21101-853**	**21101-854**	**21102-853**	**21102-854**	**20808-065**	**20808-087**
21	**34812-121**	**34813-121**					**20808-066**	**20808-088**
28	**34812-128**	**34813-128**					**20808-067**	**20808-089**
42	**34812-142**	**34813-142**					**20808-068**	**20808-091**
	6 U Height PCB depth 160 mm							
8	**34812-608**	**34813-608**					**20808-062**	**20808-083**
10	**34812-610**	**34813-610**					**20808-004**	**20808-085**
12	**34812-612**	**34813-612**					**20808-064**	**20808-086**
14	**34812-614**	**34813-614**	**21101-855**	**21101-856**	**21102-855**	**21102-856**	**20808-065**	**20808-087**
21	**34812-621**	**34813-621**					**20808-066**	**20808-088**
28	**34812-628**	**34813-628**					**20808-067**	**20808-089**
42	**34812-642**	**34813-642**					**20808-068**	**20808-091**
	PCB depth 220 mm							
8	**34812-608**	**34813-608**					**20808-062**	**20808-083**
10	**34812-610**	**34813-610**					**20808-004**	**20808-085**
12	**34812-612**	**34813-612**					**20808-064**	**20808-086**
14	**34812-614**	**34813-614**	**21101-855**	**21101-856**	**21102-855**	**21102-856**	**20808-065**	**20808-087**
21	**34812-621**	**34813-621**					**20808-066**	**20808-088**
28	**34812-628**	**34813-628**					**20808-067**	**20808-089**
42	**34812-642**	**34813-642**					**20808-068**	**20808-091**
Dimensions see page	7.79	7.79					7.79	7.79

1) SPQ (standard pack quantity): Order number includes 1 piece, but delivery is exclusively made in standard pack quantity (SPQ); please order at least the SPQ quantity or a multiple thereof

Order number includes one packaging unit (PU); delivery is exclusively made in PU

Frame type plug-in units PRO ServicePLUS

INDIVIDUAL COMPONENTS

SIDE PANELS, COVER PLATES, GUIDE RAILS

	Extruded side panel		Extruded side panel with cooling fins		Side panel, corner profile and side plate		Cover plate	
	Left	Right	Left	Right	Corner profile	Side plate	Without perforation	With perforation
	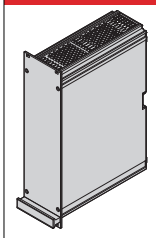 04808124	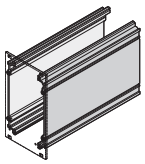 04808065	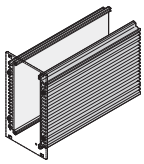 04811050		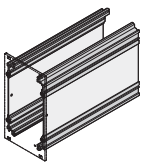 04808066	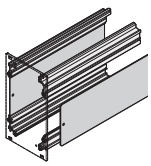 04808067	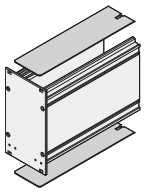 04808068	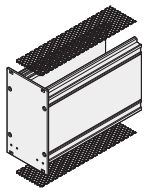 04808070
Supplied quantity for assembly of 5 frame type plug-in units	Al extrusion, colourless passivated, with groove for one PCB; 3 U symmetrical; 6 U asymmetrical, right and left side panel different) Side panels with and without cooling fins can be combined		Al extrusion, colourless passivated, with groove for one PCB; 3 U symmetrical; 6 U asymmetrical Side panels with and without cooling fins can be combined		Al extrusion, colourless passivated, with groove for one PCB, please order side plate separately	St, 1 mm, zinc-plated, is inserted into side panel rear angle	St, 1.0 mm, zinc-plated; PCB only possible in slot 1	St, 1.2 mm, Al, airflow rate in perforated area approx. 65 %; PCB only possible in slot 1
	1 piece (SPQ 10)[1]	1 piece (SPQ 10)[1]	1 piece (SPQ 10)[1]	1 piece (SPQ 10)[1]	1 piece (SPQ 10)[1]	1 piece (SPQ 5)[1]	1 piece (SPQ 10)[1]	1 piece (SPQ 10)[1]
	3 U Height PCB depth 160 mm							
8	**34812-100** 1 piece (SPQ 10)[1]	**34812-100** 1 piece (SPQ 10)[1]	**34812-200**	**34812-200**	**34812-102**	**34812-103**	**34812-408**	**34812-958**
10							**34812-410**	**34812-960**
12							**34812-412**	**34812-962**
14							**34812-414**	**34812-964**
21							**34812-421**	**34812-971**
28							**34812-428**	**34812-978**
42							**34812-442**	**34812-992**
	PCB depth 220 mm							
8	**34813-100** 1 piece (SPQ 10)[1]	**34813-100** 1 piece (SPQ 10)[1]	**34813-200**	**34813-200**	**34813-102**	**34813-103**	**34813-408**	**34813-958**
10							**34813-410**	**34813-960**
12							**34813-412**	**34813-962**
14							**34813-414**	**34813-964**
21							**34813-421**	**34813-971**
28							**34813-428**	**34813-978**
42							**34813-442**	**34813-992**
	6 U Height PCB depth 160 mm							
8	**34812-600** 1 piece (SPQ 5)[1]	**34812-601** 1 piece (SPQ 5)[1]	–	**34812-701**	**34812-102**	**34812-603**	**34812-408**	**34812-958**
10							**34812-410**	**34812-960**
12							**34812-412**	**34812-962**
14							**34812-414**	**34812-964**
21							**34812-421**	**34812-971**
28							**34812-428**	**34812-978**
42							**34812-442**	**34812-992**
	PCB depth 220 mm							
8	**34813-600** 1 piece (SPQ 5)[1]	**34813-601** 1 piece (SPQ 5)[1]	–	**34813-701**	**34813-102**	**34813-603**	**34813-408**	**34813-958**
10							**34813-410**	**34813-960**
12							**34813-412**	**34813-962**
14							**34813-414**	**34813-964**
21							**34813-421**	**34813-971**
28							**34813-428**	**34813-978**
42							**34813-442**	**34813-992**
Dimensions see page	7.77	7.77	7.77	7.77	7.78	7.78	7.84	7.84

1) SPQ (standard pack quantity): Part number includes 1 piece, but delivery is exclusively made in standard pack quantity (SPQ); please order at least the SPQ quantity or a multiple

Part number in bold face type: ready for despatch within 2 working days
Part number in normal type: ready for despatch within 10 working days

Frame type plug-in units PRO ServicePLUS

INDIVIDUAL COMPONENTS

REAR PANELS, ASSEMBLY MATERIAL

	With perforation for guide rails		Rear panel			Rear panel fastener	Assembly kit
	Cover plate	Guide rail	Without cut-out	Cut-out for one connector	Cut-out for multiple connectors	for connection of rear panel with cover plate	
	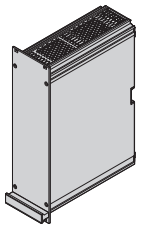 04808124	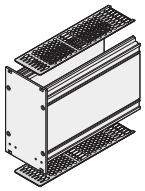 04808069	04808074	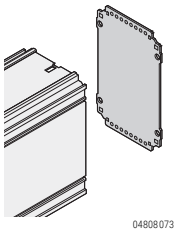 04808073	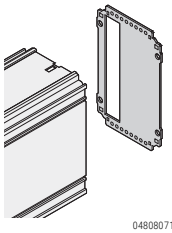 04808071	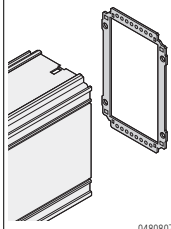 04808072	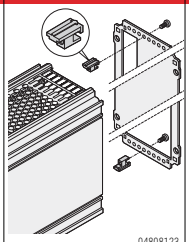 04808123	for mounting five 3 U or 6 U frame type plug-in units from ServicePLUS components: front panel, rear panel, side panel, cover plate and handle, **Delivery includes:** 40x screw 3x20, Torx, self-tapping; 30x plastic nipples; 30x neck screw M2.5x12.3; 10x fixing clip; 10x pan head screw M2.5x10, Torx description see page 7.75
Supplied quantity for assembly of 5 frame type plug-in units	St, 1.0 mm, zinc-plated; air flow rate in perforated area approx. 60 %; please order snap-in guide rails separately	PBT, UL 94 V-0, red, groove width 2 mm, PCB fixing required from slot 2, see page 7.76	St, 1.5 mm, zinc-plated	St, 1.5 mm, zinc-plated	St, 1.5 mm, zinc-plated, for EN 60603 (DIN 41612) connectors, types: B, C, D, F, H, Q, R, S	10 rear panel fasteners, Zn die-cast; 10 fixing screws; not suitable for cover plate with perforation	
	1 piece (SPQ 10)[1)]	PU 10 pieces	1 piece (SPQ 5)[1)]	1 piece (SPQ 5)[1)]	1 piece (SPQ 5)[1)]	PU 1 kit	PU 1 kit
	3 U Height						
	PCB depth 160 mm						
8	**34812-908**		**34813-208**	**34812-208**	**34812-308**		
10	**34812-910**		**34813-210**	**34812-210**	**34812-310**		
12	**34812-912**		**34813-212**	**34812-212**	**34812-312**		
14	**34812-914**	**24812-101**	**34813-214**	**34812-214**	**34812-314**	**24812-401**	**24812-100**
21	**34812-921**		**34813-221**	**34812-221**	**34812-321**		
28	**34812-928**		**34813-228**	**34812-228**	**34812-328**		
42	**34812-942**		**34813-242**	**34812-242**	**34812-342**		
	PCB depth 220 mm						
8	**34813-908**		**34813-208**	**34812-208**	**34812-308**		
10	**34813-910**		**34813-210**	**34812-210**	**34812-310**		
12	**34813-912**		**34813-212**	**34812-212**	**34812-312**		
14	**34813-914**	**24812-101**	**34813-214**	**34812-214**	**34812-314**	**24812-401**	**24812-100**
21	**34813-921**		**34813-221**	**34812-221**	**34812-321**		
28	**34813-928**		**34813-228**	**34812-228**	**34812-328**		
42	**34813-942**		**34813-242**	**34812-242**	**34812-342**		
	6 U Height						
	PCB depth 160 mm						
8	**34812-908**		**34813-708**	**34812-708**	**34812-808**		
10	**34812-910**		**34813-710**	**34812-710**	**34812-810**		
12	**34812-912**		**34813-712**	**34812-712**	**34812-812**		
14	**34812-914**	**24812-101**	**34813-714**	**34812-714**	**34812-814**	**24812-401**	**24812-100**
21	**34812-921**		**34813-721**	**34812-721**	**34812-821**		
28	**34812-928**		**34813-728**	**34812-728**	**34812-828**		
42	**34812-942**		**34813-742**	**34812-742**	**34812-842**		
	PCB depth 220 mm						
8	**34813-908**		**34813-708**	**34812-708**	**34812-808**		
10	**34813-910**		**34813-710**	**34812-710**	**34812-810**		
12	**34813-912**		**34813-712**	**34812-712**	**34812-812**		
14	**34813-914**	**24812-101**	**34813-714**	**34812-714**	**34812-814**	**24812-401**	**24812-100**
21	**34813-921**		**34813-721**	**34812-721**	**34812-821**		
28	**34813-928**		**34813-728**	**34812-728**	**34812-828**		
42	**34813-942**		**34813-742**	**34812-742**	**34812-842**		
Dimensions see page	7.84	7.81	7.80	7.80	7.80		

1) SPQ (standard pack quantity): Part number includes 1 piece, but delivery is exclusively made in standard pack quantity (SPQ); please order at least the SPQ quantity or a multiple
Part no. includes one packing unit (PU); delivery is exclusively made in PU

INDIVIDUAL COMPONENTS

FIXING MATERIAL (100 PIECES)

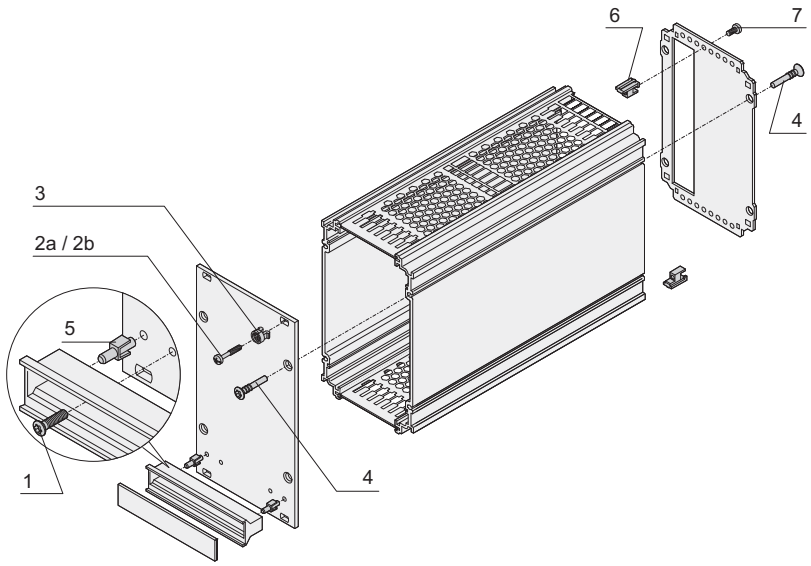

Fixing parts	Item		Required quantity per plug-in unit	Description	Qty/PU	Part No.
Fixing parts for mounting the module in subrack or case						
Torx panhead screw, M2.5 x 10, St, zinc-plated, self-forming thread	1	aza45940	2	Assembly of handle on front panel	100	**24560-179**
Collar screws pozidrive/slot (Philips) M2.5 × 12.3, St, nickel-plated	2a	aza46586	4 / 6* 06107050	Mounting of front panel on horizontal rail with threaded insert pushed in to front	100	**21102-026**
Slotted Pozidrive collar screw M2.5 × 12.3, St, nickel-plated	2b	aza46586	4 / 6* 06107051	Front panel is fitted to horizontal rail with threaded insert pushed in to rear in the standard position	100	**21101-101**
Plastic sleeves for form hole 5.9 x 3.3, PA, UL 94 V-2, grey	3	aza45933	4 / 6*	Is needed to fix collar screws	100	**21100-464**
Fixing parts for mounting the module						
Torx raised countersunk panhead screw, T8 3 × 20, St, nickel-plated	4	06708052	8	Assembly of front panel and rear panel on extruded side panel/rear extrusion of side panel	100	**24812-501**
Fixing clip for trapeziform plastic handle PPE UL 94 V-0, black	5	04608090	2	Alignment aid for handle on front panel	100	**21101-239**
Rear panel fastener Zn die-cast	6	04808128	2	To stabilise rear panel with wide frame-type plug-in units	100	**24812-402**
Torx panhead screw, T8 M2.5 × 10, St, nickel-plated	7	aza45940	2	To fix rear panel fastener or board fixing	100	**24560-148**
Board support (slot 1) Zn die-cast		04808126	2	Board support (slot 1) see page 7.76	50 Paar	**24812-202**
Board support (from slot 2) Zn die-cast		04808127	2	Board support (from slot 2) see page 7.76	50 Paar	**24812-302**
Torx panhead screw, T8 M2.5 × 6, St, nickel-plated		aza45940	2	is needed for board fixing without connector see page 7.76	100	**24560-178**
Torx screwdriver T8			1			**64560-026**

* on 42 HP EMC shielded frame type plug-in units

- Further collar screws and sleeves see page 7.107

Part number in bold face type: ready for despatch within 2 working days
Part number in normal type: ready for despatch within 10 working days

Frame type plug-in units PRO ServicePLUS

INDIVIDUAL COMPONENTS

BOARD FIXING

	Board fixing slot 1	Board fixing from slot 2	
	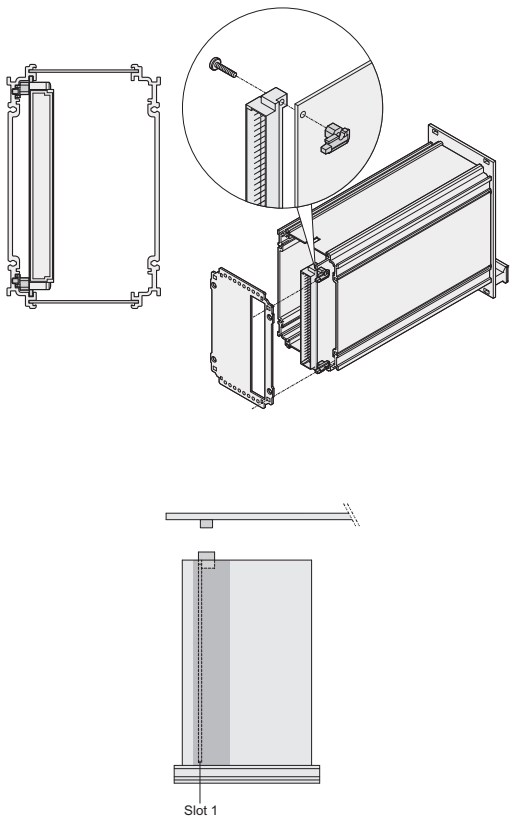 04808118 04808109 04808129	With connector from slot 2 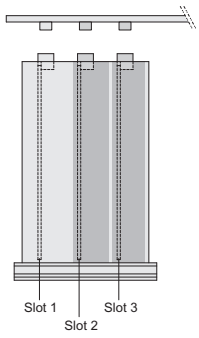 Without connector from slot 2 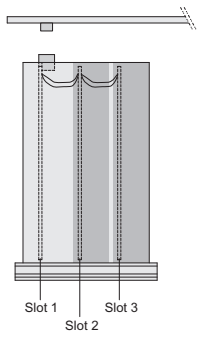 04808119 04808110 bga42785 kaa46417	
	Zn die-cast, Torx panhead screw M2.5 x 10; PCB is pushed into the guiding groove of the left side panel/ side panel rear angle, is fixed with rear panel	Zn die-cast, Torx panhead screw M2.5 x 10; PCB is pushed into guide rail, is fixed with rear panel	
Height	PU 5 pair	PU 5 pair	
3 U	**24812-201**	**24812-301**	
6 U	**24812-201**	**24812-301**	
Assembly kits		With connector from slot 2	Without connector from slot 2
Torx panhead screw, M2.5 x 6, St, nickel-plated, PU 100 pieces; is needed for board fixing without connector	**24560-1** aza45940	–	**24560-178**
Connector mounting on PCB, for 6 U frame type plug-in units (centre) Torx panhead screw M2.5 x 10, nut M2.5; PU 10 pieces (screw + nut)	**2481** 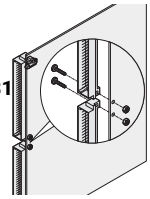 04808120	**24812-600**	

Frame type plug-in units PRO

DIMENSIONS SIDE PANEL WITHOUT COOLING FINS

3 U

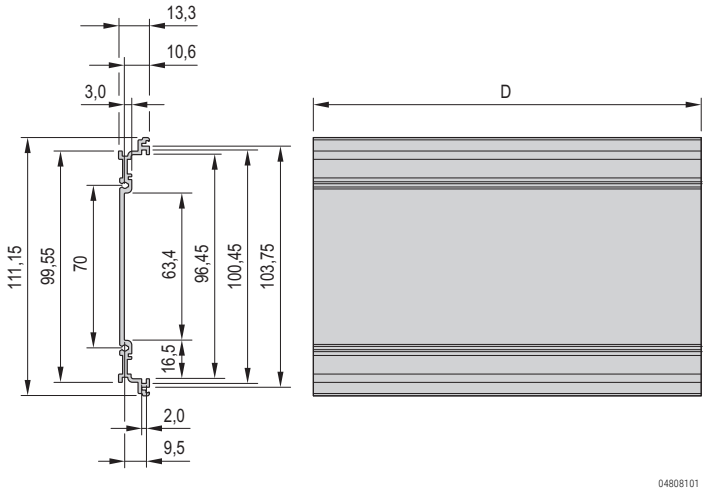

Depth = 167/227 mm

6 U

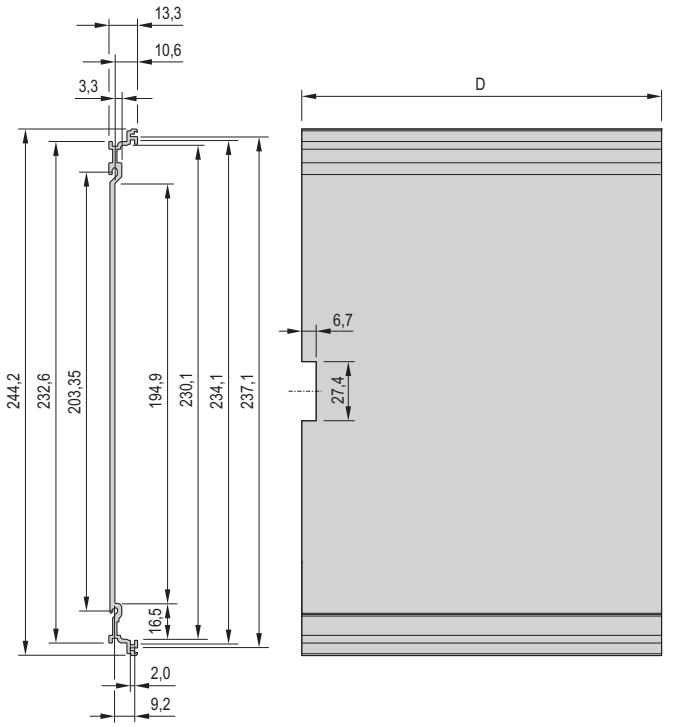

DIMENSIONS SIDE PANEL WITH COOLING FINS

3 U

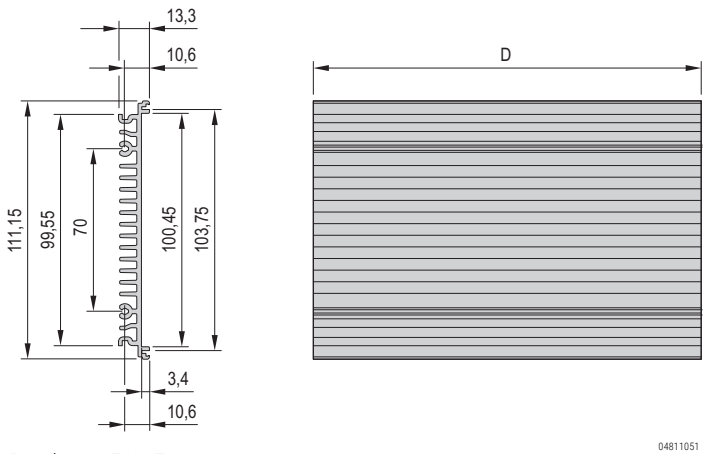

Depth = 167/227 mm

6 U

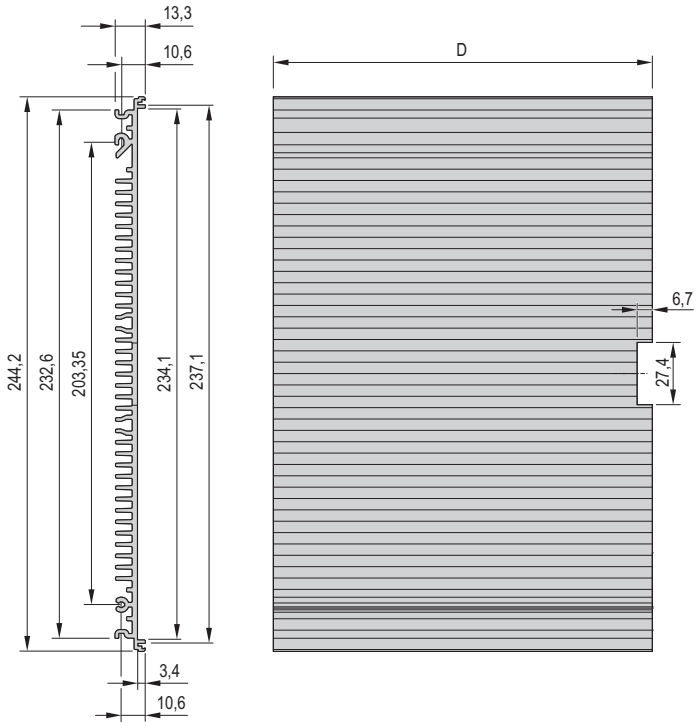

Part number in bold face type: ready for despatch within 2 working days
Part number in normal type: ready for despatch within 10 working days

DIMENSIONS SIDE PANEL REAR ANGLE

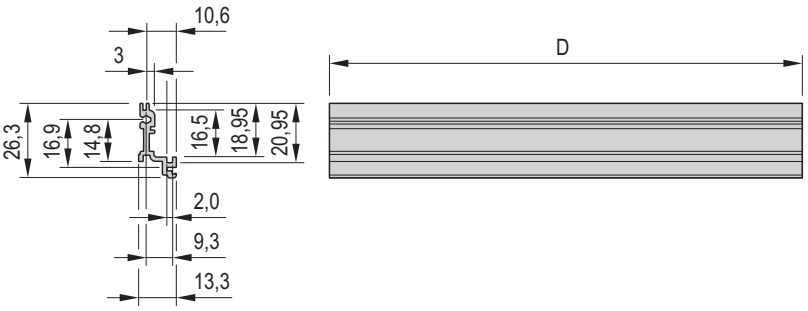

Depth = 167/227 mm

DIMENSIONS SIDE PLATE

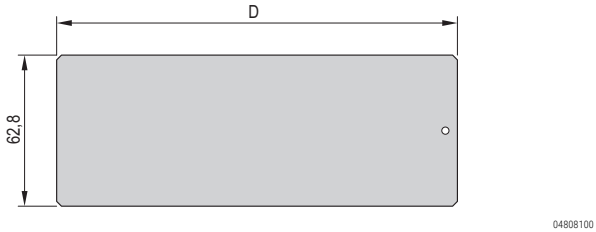

3 U for side panel rear angle

6

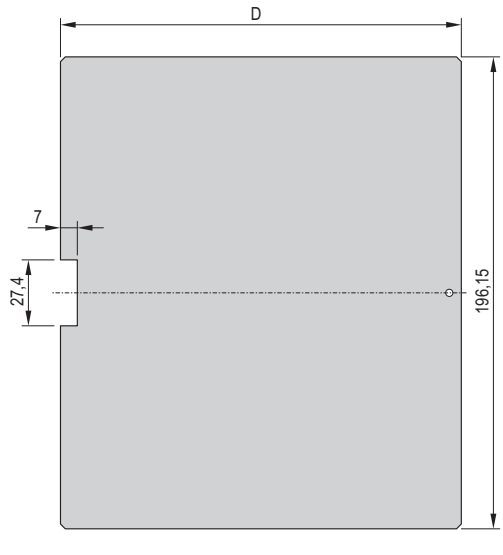

6 U for side panel rear angle

Frame type plug-in units PRO

DIMENSIONS FRONT PANELS

Unshielded

3 U

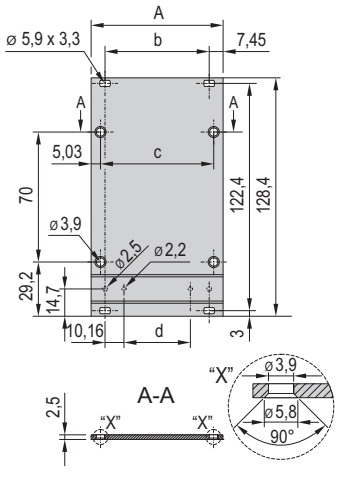

04808086

6 U

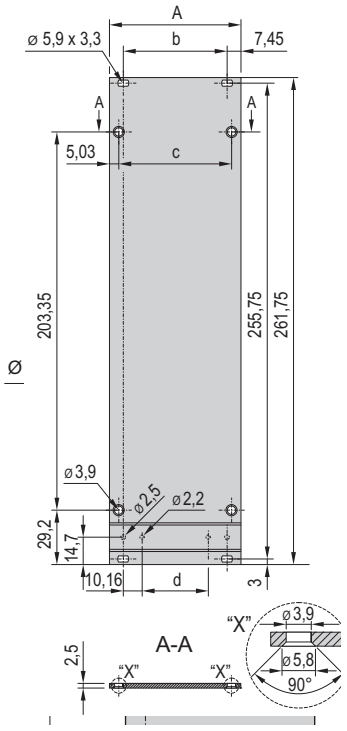

04808087

Shieldable, for EMC textile gasket

3 U

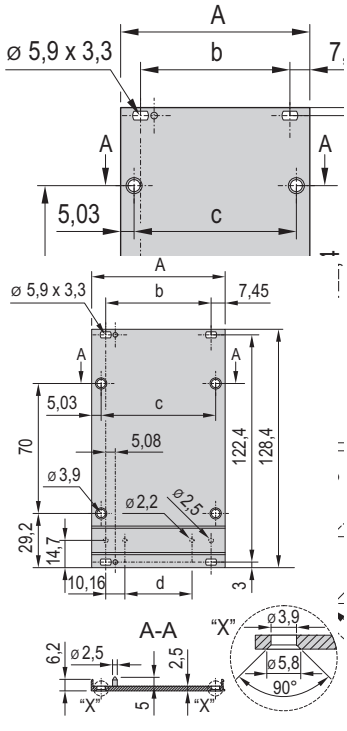

04808088

6 U

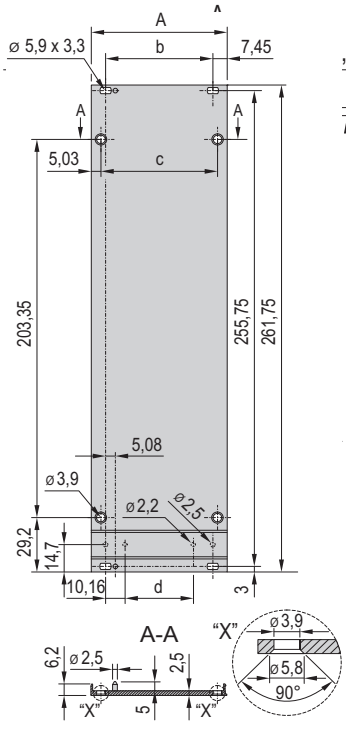

04808089

Width	A mm	b mm	c mm	d mm
8 HP	40.30	25.40	30.24	5.08
10 HP	50.46	35.56	40.40	15.24
12 HP	60.62	45.72	50.56	25.40
14 HP	70.78	55.88	60.72	35.56
21 HP	106.34	91.44	96.28	71.12
28 HP	141.90	127.00	131.84	106.68
42 HP	213.02	198.12	202.96	177.80

DIMENSIONS FRONT HANDLE

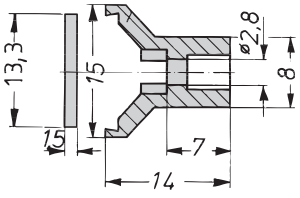

A4-328e

Dimensions table	
Width HP	Width mm
8 HP	39.2
10 HP	49.4
12 HP	59.6
14 HP	69.7
21 HP	105.2
28 HP	140.8
42 HP	212.0

Part number in bold face type: ready for despatch within 2 working days
Part number in normal type: ready for despatch within 10 working days

Frame type plug-in units PRO

DIMENSIONS REAR PANEL 3 U

Without cut-out | For one connector | For multiple connectors

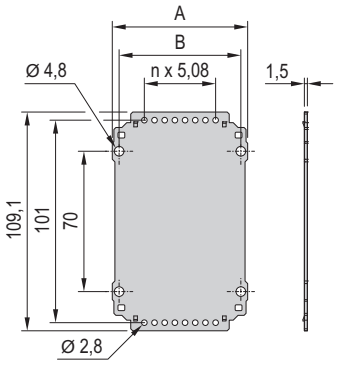

04808092

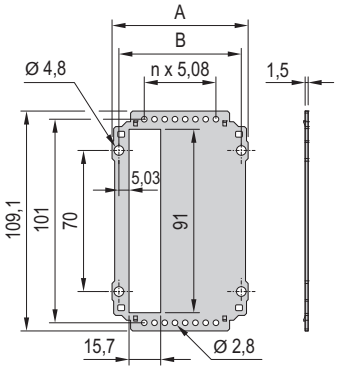

04808091

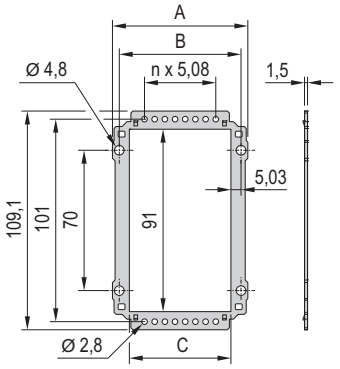

04808090

Dimensions table

HP	A mm	B mm	C mm	n
8 HP	37.04	30.24	20.18	1
10 HP	47.20	40.40	30.34	3
12 HP	57.36	50.56	40.50	5
14 HP	67.52	60.72	50.66	7
21 HP	103.08	96.28	86.22	14
28 HP	138.64	131.84	121.78	21
42 HP	209.76	202.96	192.90	35

DIMENSIONS REAR PANEL 6 U

Without cut-out | For one connector | For multiple connectors

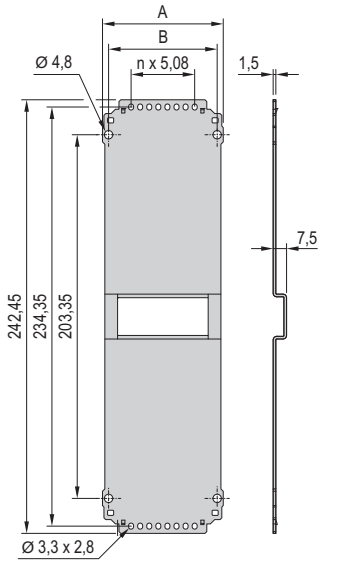

04808095

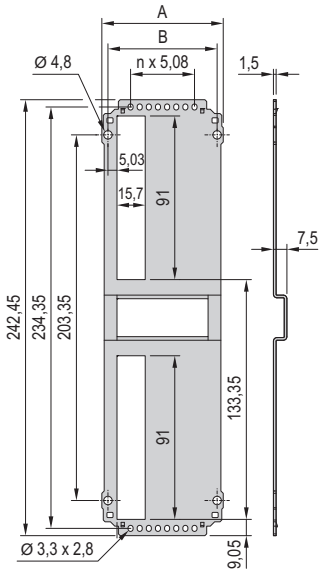

04808094

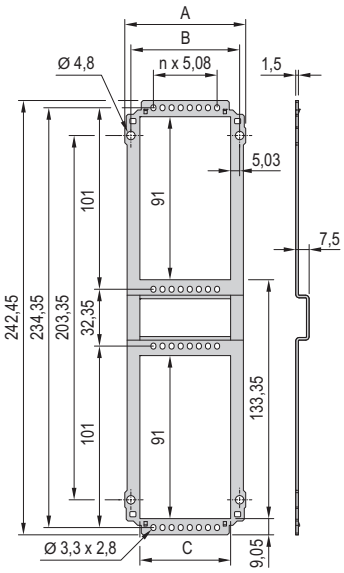

04808093

Dimensions table

HP	A mm	B mm	C mm	n
8 HP	37.04	30.24	20.18	1
10 HP	47.20	40.40	30.34	3
12 HP	57.36	50.56	40.50	5
14 HP	67.52	60.72	50.66	7
21 HP	103.08	96.28	86.22	14
28 HP	138.64	131.84	121.78	21
42 HP	209.76	202.96	192.90	35

Frame type plug-in units PRO

DIMENSIONS GUIDE RAIL

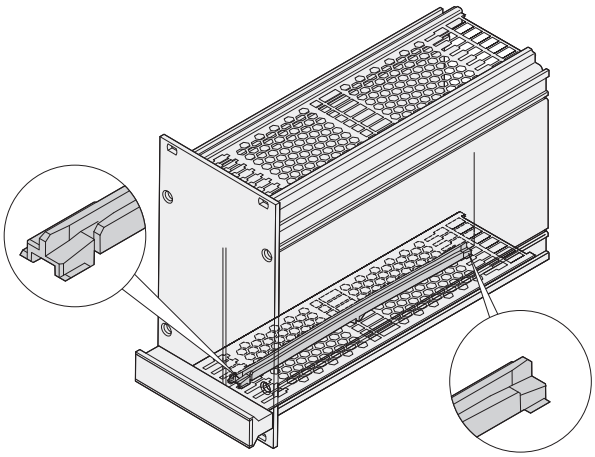

04808096

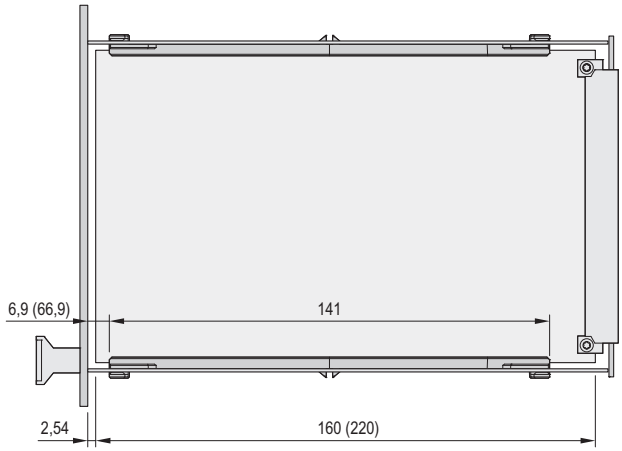

04808088

DIMENSIONS COVER PLATES

without perforation | with perforation | for guide rail mounting

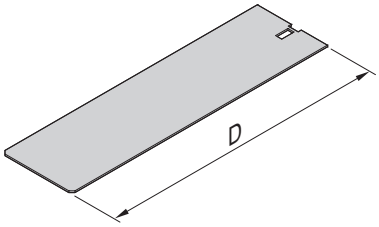

04808104

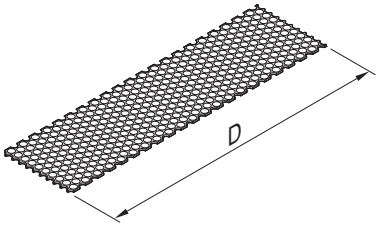

04808106

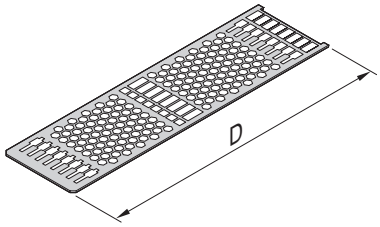

04808105

D = 167/227 mm

Part number in bold face type: ready for despatch within 2 working days
Part number in normal type: ready for despatch within 10 working days

Frame type plug-in units PRO

DIMENSIONS

MOUNTING INSTRUCTIONS FOR GUIDE RAILS IN FRAME TYPE PLUG-IN UNITS

Slot 1 + slot 2

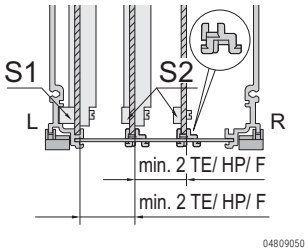

Slot 2

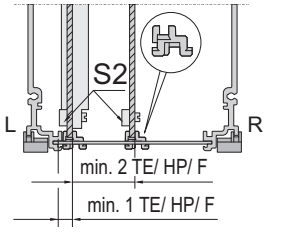

Front view

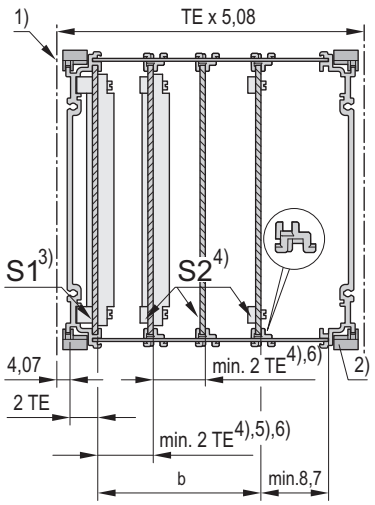

- Mounting pitch for guide rails: 1 HP
- Min. distance between 2 guide rails: 2 HP

Width of frame type plug-in unit	b	Max. number of PCBs mountable	
HP	mm	slot 1	from slot 2
8	–	1	1
	5.08	–	1 5)
10	10.16	1	1 6)
	15.24	–	2 5)6)
12	20.32	1	2 6)
	25.40	–	3 5) 6)
14	30.48	1	3 6)
	35.56	–	4 5) 6)
21	71.12	1	7 6)
	66.04	–	7 5) 6)
28	101.60	1	10 6)
	106.68	–	11 5) 6)
42	172.72	1	17 6)
	177.80	–	18 5) 6)

TE = HP = F
1) Division line
2) Guide rail rotated by 180° from standard position
3) The first PCB is held in the extruded side panel, corresponds to standard position (slot 1)
4) All additional PCBs are fitted into guide rails (from slot 2)
5) Min. 1 HP where slot 1 is not used (slot 2)
6) Dependent on construction of connector used (not every connector allows a 2 HP fitting)

DIMENSIONS

MOUNTING SPACE FRAME-TYPE PLUG-IN UNIT 3 U/6 U

Front view

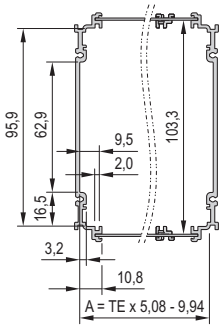

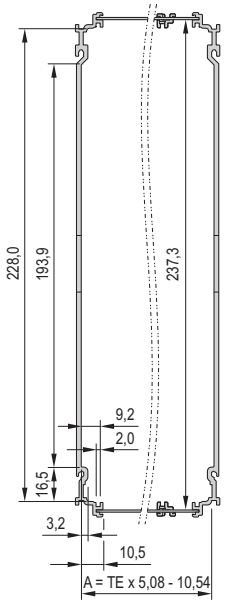

DIMENSIONS TABLE

Height	Width	A
U	HP	mm
3	8	30.70
3	10	40.86
3	12	51.02
3	14	61.18
3	21	96.74
3	28	132.30
3	42	203.42
6	8	30.10
6	10	40.26
6	12	50.42
6	14	60.58
6	21	96.14
6	28	131,70
6	42	202.82

Frame type plug-in units PRO with hood

FRAME TYPE PLUG-IN UNITS PRO WITH HOOD, 3/6 U, FRONT PANEL SHIELDED (TEXTILE GASKET)

04808007

Illustration shows 12 HP width, side panel depth 167 mm

- Protects a PCB against mechanical damage and deflects electrostatic discharge; for euroboard formats
- Suitable in all subracks and these cases: ratiopacPRO/-air, propacPRO and compacPRO
- Useable connectors in accordance with EN 60603-2 (DIN 41612)
- 2 depths, for 160 mm and 220 mm boards

DELIVERY COMPRISES (kit)

Item	Qty	Description
1	1	Front panel, U profile, 2.5 mm, front anodised, rear conductive, alignment pin pressed-in
2	1	Handle, grey, PPE, UL 94 V-1
3	1	Side panel, Al extrusion, colourless passivated, with groove for one PCB
4	1	Hood, Al, 1 mm, with perforation, rear panel integrated
5	1	EMC textile gasket
6	1	Assembly kit (incl. PCB fixing for slot 1)

ORDER INFORMATION

5 HP	6 ... 14 HP	Height U	Width HP	Depth = 167 mm Part no.	Depth = 227 mm Part no.
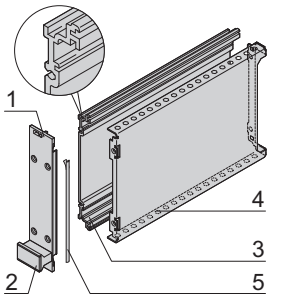 04808075	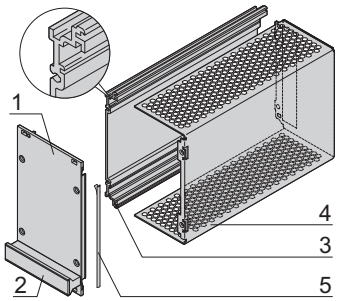 04808113	3	5	**24813-005**	**24813-055**
		3	6	**24813-006**	**24813-056**
		3	7	**24813-007**	**24813-057**
		3	10	**24813-010**	**24813-060**
		3	12	**24813-012**	**24813-062**
		3	14	**24813-014**	**24813-064**
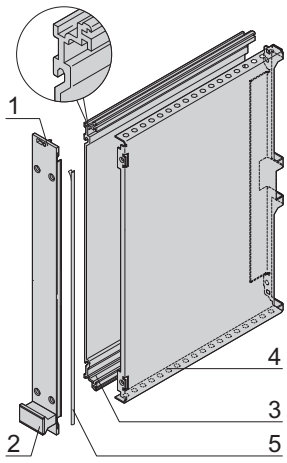 04808076	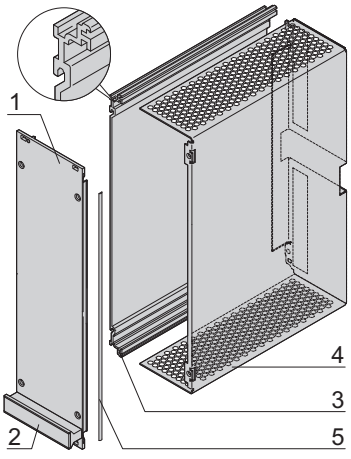 04808114	6	5	**24813-505**	**24813-555**
		6	6	**24813-506**	**24813-556**
		6	7	**24813-507**	**24813-557**
		6	10	**24813-510**	**24813-560**
		6	12	**24813-512**	**24813-562**
		6	14	**24813-514**	**24813-564**

- Dimension drawings see from page 7.88

Part number in bold face type: ready for despatch within 2 working days
Part number in normal type: ready for despatch within 10 working days

Frame type plug-in units PRO with hood

PLUG-IN UNITS PRO WITH HOOD, 3/6 U, FRONT PANEL UNSHIELDED

04808002

Illustration shows 12 HP width, side panel depth 167 mm

- Protects a PCB against mechanical damage and deflects electrostatic discharge; for euroboard formats
- Suitable in all subracks and these cases: ratiopacPRO/-air, propacPRO and compacPRO
- Useable connectors in accordance with EN 60603-2 (DIN 41612)
- 2 depths, for 160 mm or 220 mm board

DELIVERY COMPRISES (kit)

Item	Qty	Description
1	1	Front panel, Al, 2.5 mm, anodised, cut edges plain
2	1	Handle, grey, PPE, UL 94 V-1
3	1	Side panel, Al extrusion, colourless passivated, with groove for one PCB
4	1	Hood, Al, 1 mm, with perforation, rear panel integrated
5	1	Assembly kit (incl. PCB fixing for slot 1)

ORDER INFORMATION

5 HP	6 ... 14 HP	Height U	Width HP	Depth = 167 mm Part no.	Depth = 227 mm Part no.
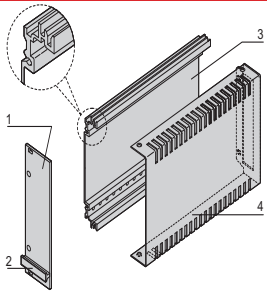 04808077	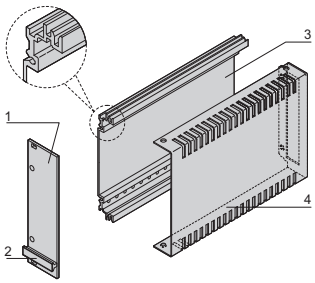 04808115	3	5	**24812-005**	**24812-055**
		3	6	**24812-006**	**24812-056**
		3	7	**24812-007**	**24812-057**
		3	10	**24812-010**	**24812-060**
		3	12	**24812-012**	**24812-062**
		3	14	**24812-014**	**24812-064**
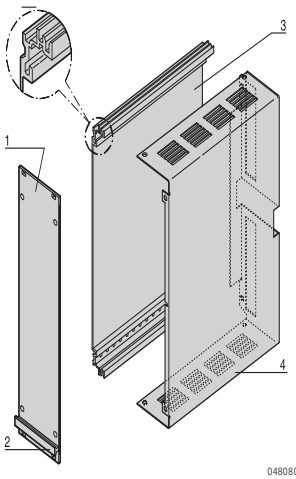 04808078	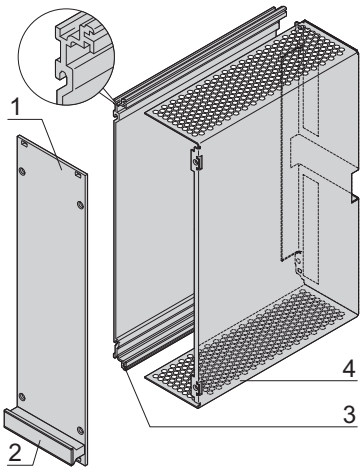 04808116	6	5	**24812-505**	**24812-555**
		6	6	**24812-506**	**24812-556**
		6	7	**24812-507**	**24812-557**
		6	10	**24812-510**	**24812-560**
		6	12	**24812-512**	**24812-562**
		6	14	**24812-514**	**24812-564**

- Dimension drawings see from page 7.88

Frame type plug-in units PRO with hood

DIMENSIONS CROSS-SECTION FRAME-TYPE PLUG-IN UNITS PRO WITH HOOD 3 U/6 U

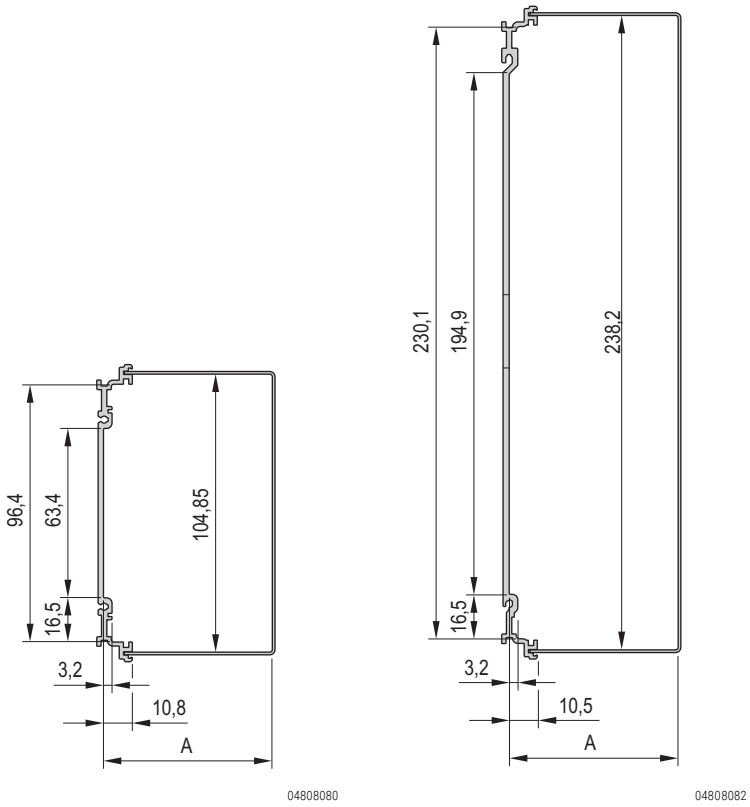

04808080 04808082

Height U	Width HP	A mm
3	5	17.52
3	6	22.60
3	7	27.68
3	10	42.92
3	12	53.08
3	14	63.24
6	5	17.22
6	6	22.30
6	7	27.38
6	10	42.62
6	12	57.78
6	14	62.94

DIMENSIONS FRONT HANDLE

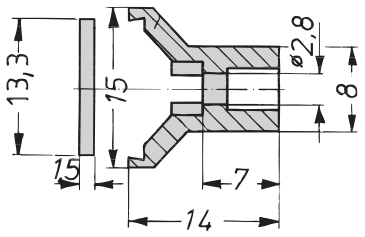

a4-328e

DIMENSIONS TABLE

Width HP	Width mm
5	24.0
6	29.0
7	34.1
10	49.4
12	59.6
14	69.7

Part number in bold face type: ready for despatch within 2 working days
Part number in normal type: ready for despatch within 10 working days

Frame type plug-in units PRO with hood

DIMENSIONS 3/6 U FRAME-TYPE PLUG-IN UNITS PRO WITH HOOD

3 U Front panel shieldable

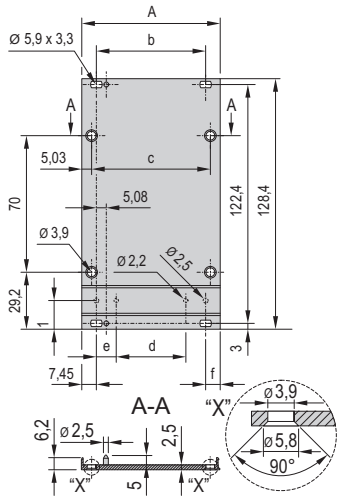

04808052

Front panel unshielded

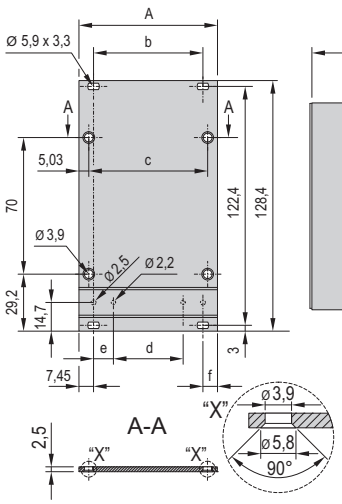

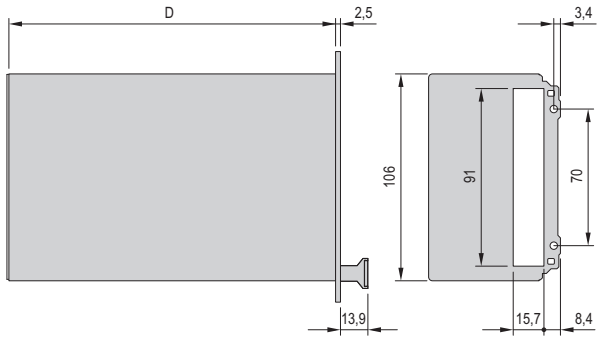

04808111

6 U Front panel shieldable

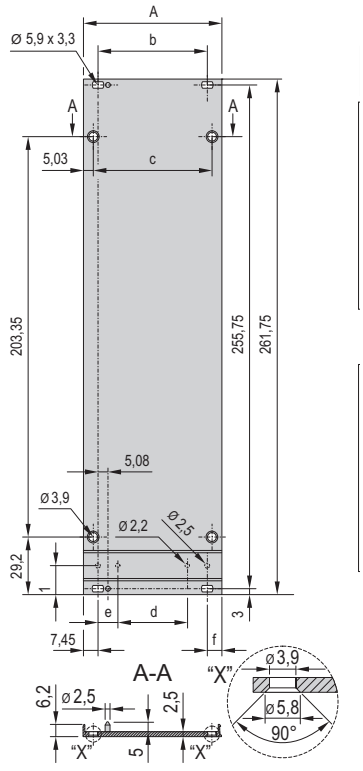

04809053

Front panel unshielded

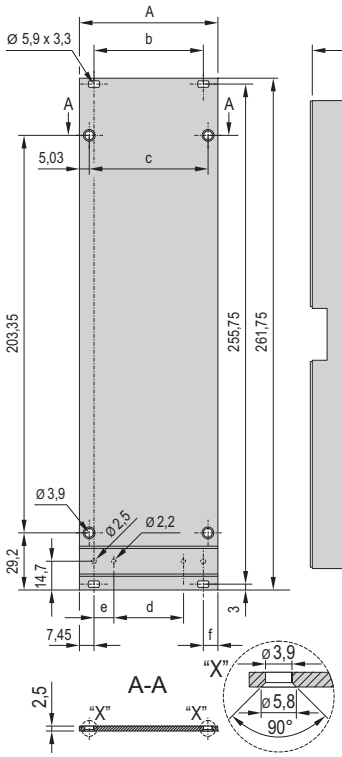

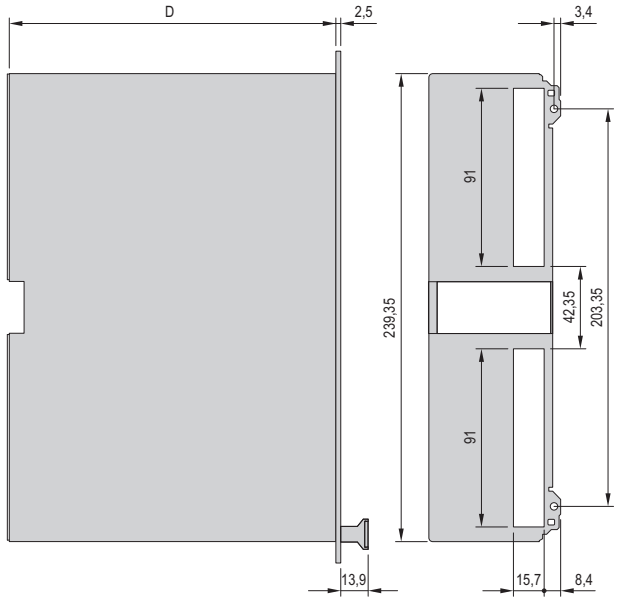

04808112

Front panel

5 HP

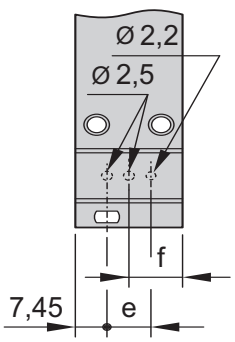

04809067

6 + 7 HP

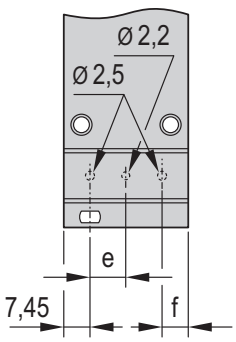

04809066

Dimensions table							
5	25.06	-	15.00	-	10.16	12.53	167 mm/ 227 mm
6	30.14	-	20.08	-	10.16	7.45	
7	35.22	-	25.16	-	10.16	7.45	
10	50.46	35.56	40.40	15.24	10.16	7.45	
12	60.62	45.72	50.56	25.40	10.16	7.45	
14	70.78	55.88	60.72	35.56	10.16	7.45	

HF frame type plug-in units

HF FRAME TYPE PLUG-IN UNITS, 3 U KITS, FRONT PANEL SHIELDED

- With high shielding from high-frequency radiation
- To accept boards in HP grid increments
- Solid body on all sides, with cooling fins

DELIVERY COMPRISES (kit)

Item	Qty	Description
1	1	Body tube, Al extrusion, black anodised, cut edges plain
2	1	Front panel, Al, 2.5 mm, with lateral grooves for EMC gasket (stainless steel), alignment pin pressed-in, front anodised, rear iridescent green chromated
3	1	Plastic handle, trapeziform, PPE, grey, identification plate, Al, anodised, cut edges plain
4	1	Rear panel, Al, 1.5 mm, etched without cut-outs
5	2	EMC gasket (steel, stainless)
6	1	Assembly kit

TECHNICAL DATA

HF plug-in unit	Thermal resistance K/W	
HP	Depth = 167 mm	Depth = 227 mm
7	1.68	1.51
10	1.62	1.46
12	1.56	1.40
14	1.50	1.35
21	1.06	0.95
28	0.94	0.85

ORDER INFORMATION

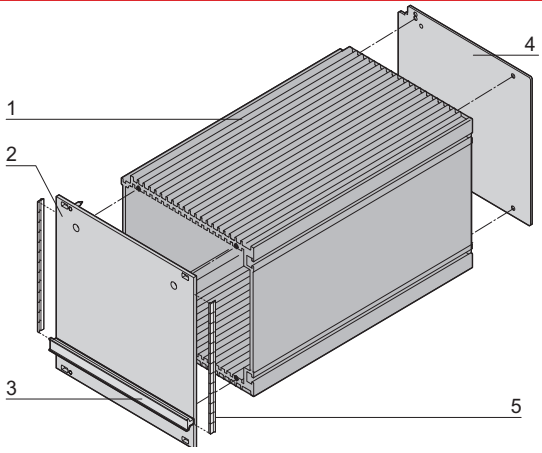

Height U	Width HP	Depth = 167 mm Part no.	Depth = 227 mm Part no.
3	7	**20809-529**	**20809-536**
3	10	**20809-530**	**20809-537**
3	12	**20809-531**	**20809-538**
3	14	**20809-532**	**20809-539**
3	21	**20809-533**	**20809-540**
3	28	**20809-534**	**20809-541**

NOTE

- Dimension drawings see from page 7.94

Part number in bold face type: ready for despatch within 2 working days
Part number in normal type: ready for despatch within 10 working days

HF frame type plug-in units ServicePLUS

INDIVIDUAL COMPONENTS

HF BODY TUBE, FRONT PANELS WITH HANDLE, REAR PANELS

ORDER INFORMATION

Height U	Width HP	HF body tube	Shieldable front panel, with handle	Shieldable front panel, with handle, for EMC gasket (stainless steel)	Shieldable front panel, with handle, EMC gasket (stainless steel)	Shieldable front panel, with handle, Assembly tool	Rear panel, without cut-out	Rear panel, with cut-out
		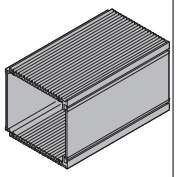 KAA45832	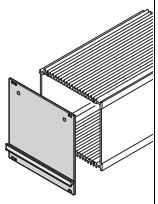 KAA45831	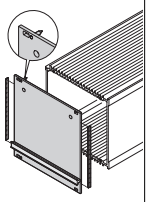 04807074	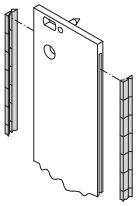 bga45760	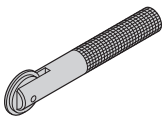 aza45937	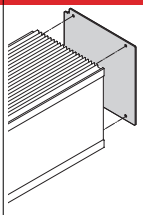 04807075	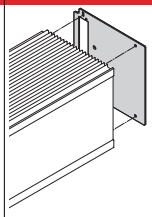 KAA45834
		Al extrusion, black anodised, cut edges plain	Al, 2.5 mm, front anodised, rear iridescent green chromated; static handle, grey, PPE, UL 94 V-1	Al, 2.5 mm, front anodised, rear iridescent green chromated, with lateral grooves for stainless steel EMC gasket (please order separately), alignment pin pressed-in, trapeziform handle, grey, PPE, UL 94 V-1	inserted laterally into the grooves of the front panel	to mount the EMC gasket (stainless steel)	Al, 1.5 mm, etched	Al, 2.5 mm, etched, cut-out for connector types EN 60603 (DIN 41612); 7 HP: B, C, D, R; 10 - 28 HP: B, C, D, R, F, H, MF, MH
		1 piece (SPQ 5)[1]	1 piece (SPQ 5)[1]	1 piece (SPQ 5)[1]	PU 100 pieces	1 piece	1 piece (SPQ 5)[1]	1 piece (SPQ 5)[1]
		PCB depth 160 mm						
3	7	**30809-667**	**20838-001**	**20838-093**	**21101-705**	**24560-270**	**30809-635**	**30809-641**
	10	**30809-677**	**20838-002**	**20838-094**			**30809-636**	**30809-642**
	12	**30809-675**	**20838-003**	**20838-095**			**30809-637**	**30809-643**
	14	**30809-673**	**20838-004**	**20838-096**			**30809-638**	**30809-644**
	21	**30809-671**	**20838-005**	**20838-097**			**30809-639**	**30809-645**
	28	**30809-669**	**20838-006**	**20838-098**			**30809-640**	**30809-646**
		PCB depth 220 mm						
3	7	**30809-668**	**20838-001**	**20838-093**	**21101-705**	**24560-270**	**30809-635**	**30809-641**
	10	**30809-678**	**20838-002**	**20838-094**			**30809-636**	**30809-642**
	12	**30809-676**	**20838-003**	**20838-095**			**30809-637**	**30809-643**
	14	**30809-674**	**20838-004**	**20838-096**			**30809-638**	**30809-644**
	21	**30809-672**	**20838-005**	**20838-097**			**30809-639**	**30809-645**
	28	**30809-670**	**20838-006**	**20838-098**			**30809-640**	**30809-646**
		Depth 1000 mm (without thread for front panel and rear panel)						
3	7	**30809-679**	–	–	–	–	–	–
	10	**30809-698**						
	12	**30809-699**						
	14	**30809-680**						
	21	**30809-681**						
	28	**30809-682**						
Dimensions see page		7.91	7.92				7.91	

1) SPQ (standard pack quantity): Part number includes 1 piece, but delivery is exclusively made in standard pack quantity (SPQ); please order at least the SPQ quantity or a multiple

Part no. includes one packing unit (PU); delivery is exclusively made in PU

HF frame type plug-in units

INDIVIDUAL COMPONENTS

SLIDE NUTS, FIXING FOR PCBS, MOUNTING KIT

ORDER INFORMATION

		Slide nut		Fixing for PCBs			Fixing material for one HF frame type plug-in unit
		M 2.5	M 3	Individual components top	Individual components bottom	Complete assembly kit	
		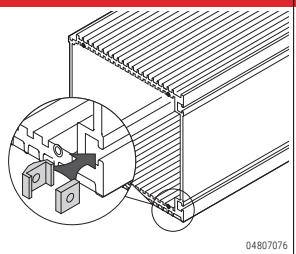 04807076		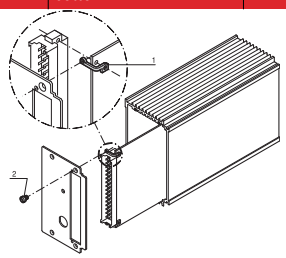 KAA45843			
		width across flats (WAF) 7, for insertion into HF body tube, top and bottom, provides lateral fixing (on right)		bracket (stainless steel), 1.5 mm; please order retention screws separately		bracket top and bottom (stainless steel), 1.5 mm; incl. two cheesehead screws M2.5 x 4	for complete assembly of a 3 U HF frame type plug-in unit: front panel, rear panel and handle, description see page 7.90
Height U	Width HP	PU 100 pieces	PU 100 pieces	1 piece (SPQ 10)[1]	1 piece (SPQ 10)[1]	PU 1 kit	PU 1 kit
3	7	**21100-112**	**21100-289**	**30809-701**	**30809-700**	**21101-937**	**21100-105**
	10						
	12						
	14						
	21						
	28						
Accessories							
Cheesehead screw M2.5 x 4, St, nickel-plated, PU 100 pieces		–	–	**21100-431**	**21100-431**	–	–

1) SPQ (standard pack quantity): Part number includes 1 piece, but delivery is exclusively made in standard pack quantity (SPQ); please order at least the SPQ quantity or a multiple

Part no. includes one packing unit (PU); delivery is exclusively made in PU

Part number in bold face type: ready for despatch within 2 working days
Part number in normal type: ready for despatch within 10 working days

ORDER INFORMATION

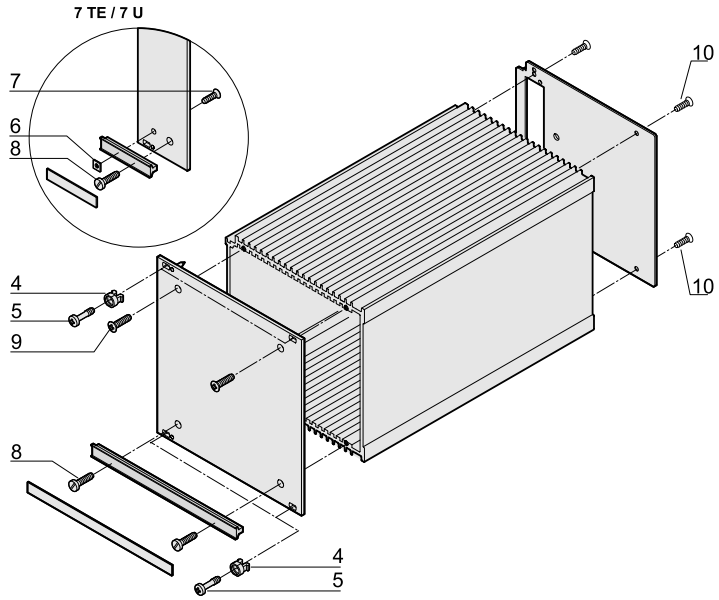

Description	Item		Required quantity per plug-in unit		Description	Qty/PU	Part no.
Fixing parts for mounting the module in subrack or case							
Plastic sleeve for form hole 5.9 x 3.3, PA, UL 94 V-2, grey	4	azа45933	2 at 7 HP 4 at > 7 HP		Front panel is fitted to horizontal rail with threaded insert pushed in to front	100	**21100-464**
Collar screws pozidrive/slot (Philips) M2.5 x 12.3, St, nickel-plated	5	azа46586	2 at 7 HP 4 at > 7 HP	06107050	Mounting of front panel on horizontal rail with threaded insert pushed in to front	100	**21102-026**
Pozidrive/slotted collar screw M2.5 x 12.3, St, nickel-plated	5	azа46586	2 at 7 HP 4 at > 7 HP	06107051	Front panel is fitted to horizontal rail with threaded insert pushed in to rear in the standard position	100	**21101-101**
Fixing parts for mounting the module							
Square nut DIN 562, M2.5,St, nickel-plated	6	06705050	1 at 7 HP		To mount handle on front panel	100	**21100-359**
Pozidrive countersunk screw M2.5 x 12, St, nickel-plated	7	azа45177	1 at 7 HP		To mount handle on front panel	100	**21100-507**
Slotted cheesehead screw M2.5 x 16, St, nickel-plated	8	azа45467	1 at 7 HP 2 at > 7 HP		To mount handle and front panel on HF body tube	100	**21100-150**
Raised Pozidrive countersunk panhead screw M2.5 x 8, St, nickel-plated	9	06702056	2		To mount front panel on HF body tube	100	**21100-429**
Pozidrive countersunk screw M2.5 x 6, St, nickel-plated	10	06702056	4		To mount rear panel on HF body tube	100	**21100-515**

NOTE

- Further collar screws and sleeves see page 7.107

HF frame type plug-in units

DIMENSIONS HF BODY TUBE

7 HP | 12 HP | 10, 14, 21, 28 HP

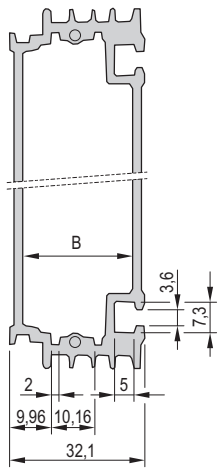

A4-247c

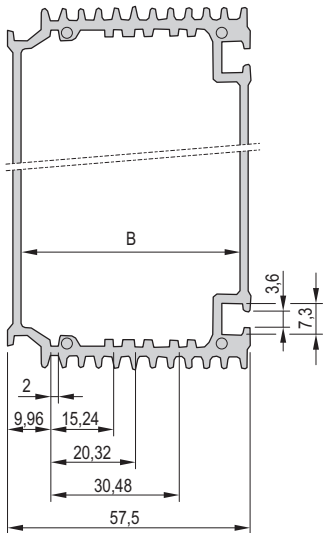

04807079

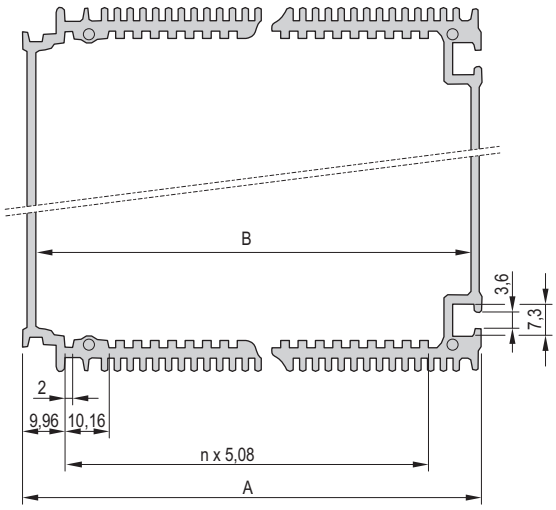

A4-247a

Dimensions table

Dimension mm	7 HP	10 HP	12 HP	14 HP	21 HP	28 HP
n	–	3 x 5.08	–	7 x 5.08	14 x 5.08	21 x 5.08
A	–	47.34	–	67.66	103.22	138.78
B	26.34	41.58	51.74	61.90	97.46	133.02

DIMENSIONS REAR PANEL WITH/WITHOUT CUT-OUT FOR CONNECTOR

7 HP | 10, 12, 14, 21, 28 HP | 7 HP | 10, 12, 14, 21, 28 HP

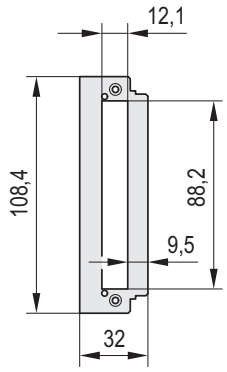

04807086

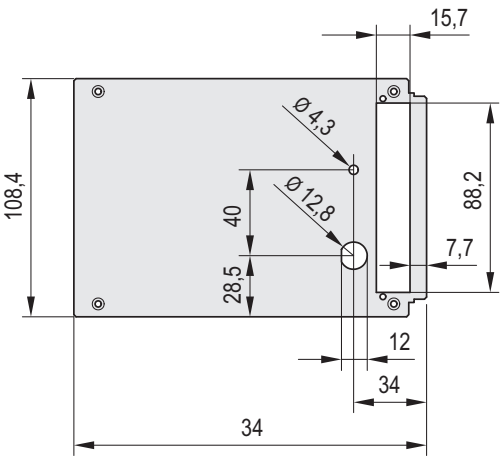

04802053

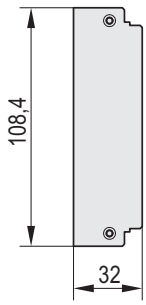

04807087

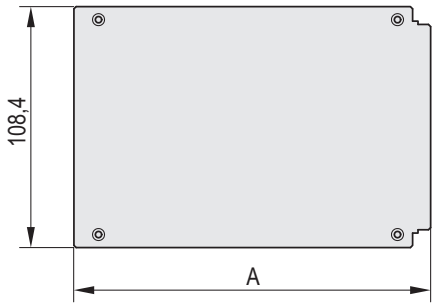

04807083

Dimensions table

Width	A mm
7 HP	32.00
10 HP	47.24
12 HP	57.40
14 HP	67,40
21 HP	103.12
28 HP	136.68

Part number in bold face type: ready for despatch within 2 working days
Part number in normal type: ready for despatch within 10 working days

HF frame type plug-in units

DIMENSIONS FRONT PANELS

Unshielded		Shieldable, slotted for EMC stainless steel gasket	
7 HP	10, 12, 14, 21, 28 HP	7 HP	10, 12, 14, 21, 28 HP

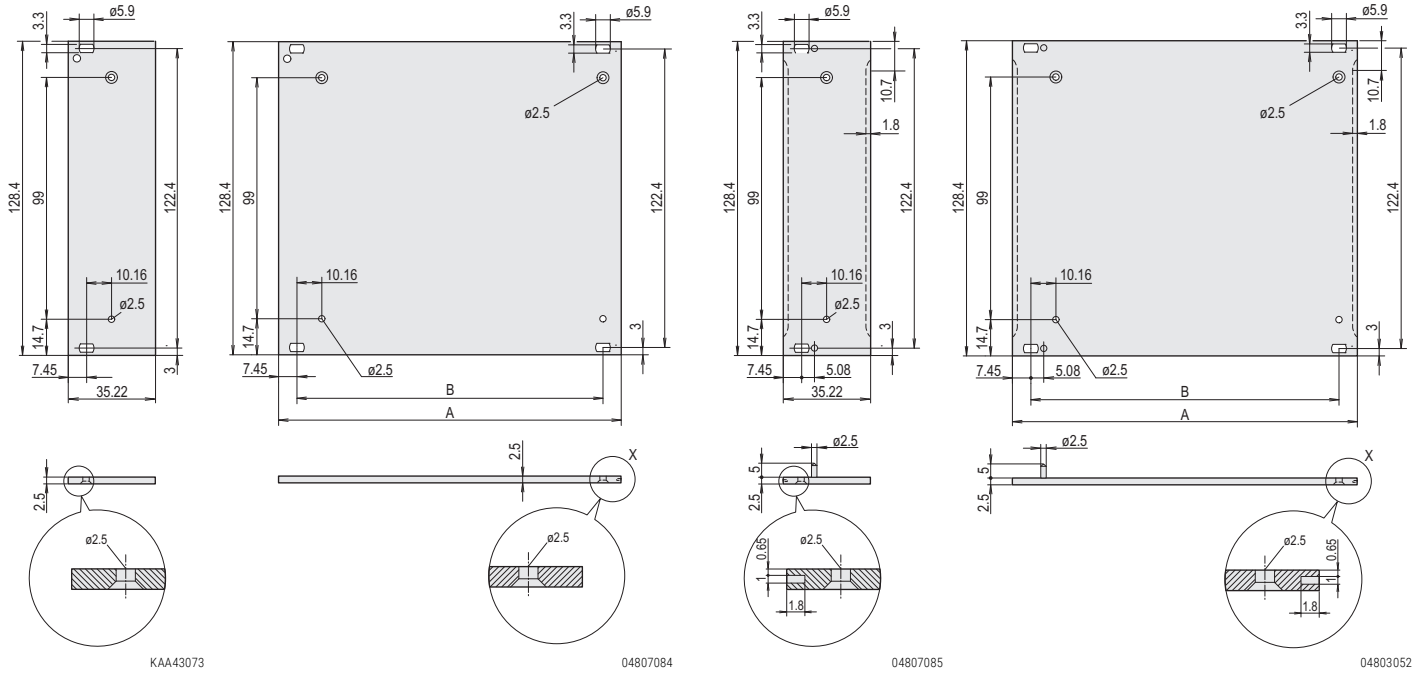

Dimensions table		
Width	A	w
	mm	mm
7 HP	32.22	–
10 HP	50.46	35.56
12 HP	60.62	45.72
14 HP	70.78	55.88
21 HP	106.34	91.44
28 HP	141.90	127.00

DIMENSIONS FRONT HANDLE

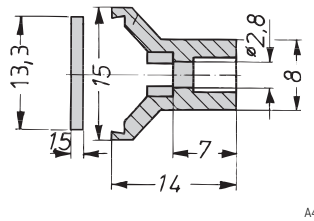

Dimensions table	
Width	Width
HP	mm
10 HP	49.4
12 HP	59.6
14 HP	69.7
21 HP	105.2
28 HP	140.8

HF frame type plug-in units

ADAPTOR FOR HORIZONTAL RAIL MOUNTING

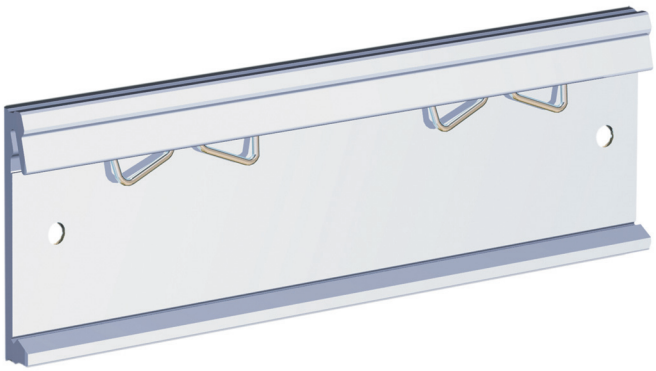

04812021

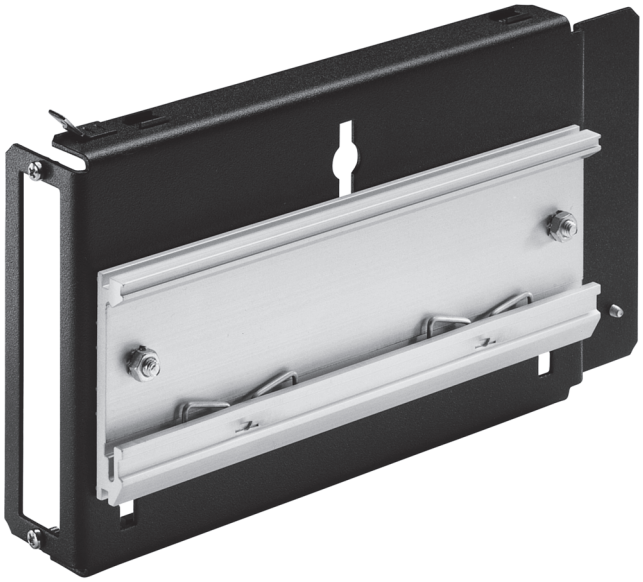

11395007

Example: horizontal rail adaptor with lip for 19" PSU

- For fitting of e.g. subracks, wall mounted cases, frame type plug-in units or PSUs on a horizontal rail with lip
- Adaptor is bolted to the desired product and can then be clipped onto the lipped horizontal rail (DIN 43880)

DELIVERY COMPRISES

Item	Qty	Description
1	1	Adaptor, Al extrusion, length 160 mm
1	1	Fixing material

ORDER INFORMATION

Description	Part no.
Adaptor for horizontal rail mounting	**11000-002**

Part number in bold face type: ready for despatch within 2 working days
Part number in normal type: ready for despatch within 10 working days

North America

Warwick, RI, USA
Tel +1.800.525.4682
San Diego, CA, USA
Tel +1.800.854.7086

Europe, Middle East & India

Straubenhardt, Germany
Tel +49 7082 794 0
Betschdorf, France
Tel +33 3 88 90 64 90
Warsaw, Poland
Tel +48 22 209 98 35
Hemel Hempstead,
Great Britain
Tel +44 1442 24 04 71
Lainate, Italy
Tel +39 02 932 714 1
Dubai, United Arab Emirates
Tel +971 4 37 81 700
Bangalore, India
Tel +91 80 67152000
Istanbul, Turkey
Tel +90 216 250 7374

Asia Pacific

Shanghai, China
Tel +86 21 2412 6943
Singapore
Tel +65 6768 5800
Shin-Yokohama, Japan
Tel +81 45 476 0271

Our powerful portfolio of brands:

CADDY ERICO HOFFMAN RAYCHEM SCHROFF TRACER

nVent

nVent.com/SCHROFF

©2018 nVent. All nVent marks and logos are owned or licensed by nVent Services GmbH or its affiliates. All other trademarks are the property of their respective owners.
nVent reserves the right to change specifications without notice.