23001-010 -> 23000-040:

a) Backplane Dimensions:

23001-010			23000-040		
Width [mm]	Height [mm]	Thickness [mm]	Width [mm]	Height [mm]	Thickness [mm]
201.76	128.50	3.20	199,34	130.07	3.20

b) Connector Positions (black: 23001-010, red: 23000-040):

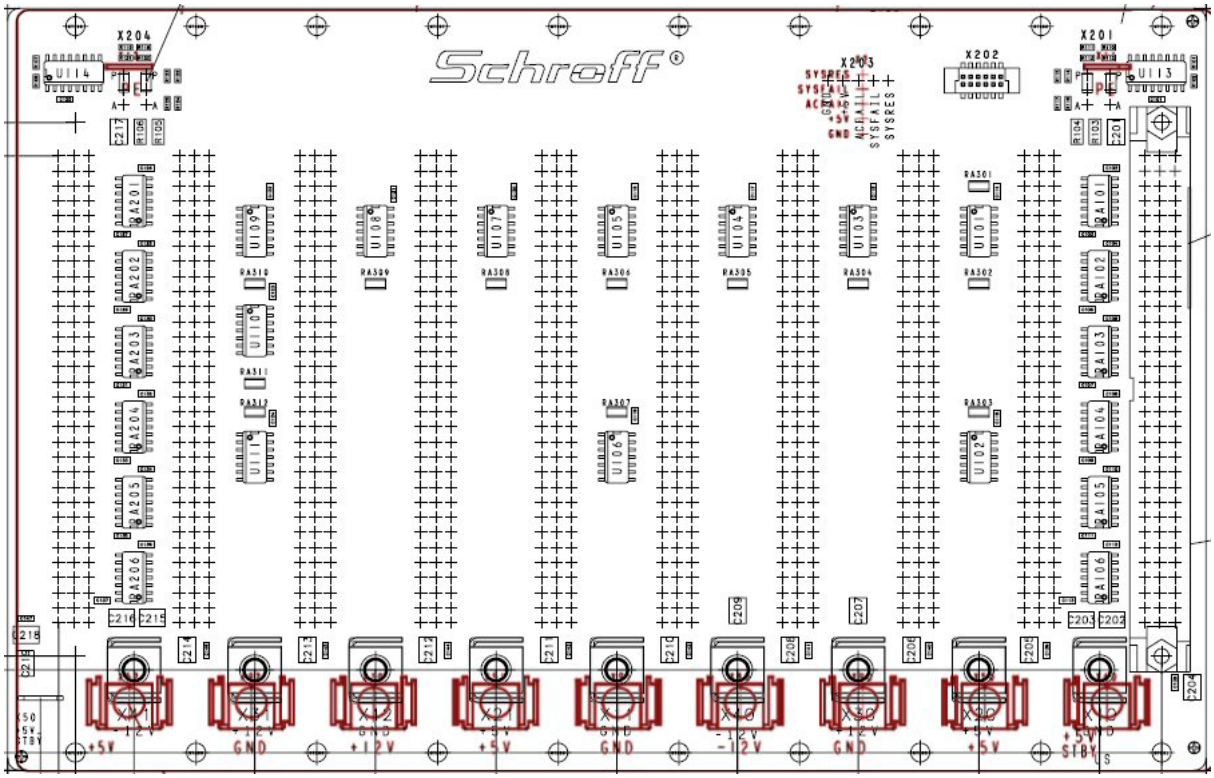

Notes:

1) Utility connector (5 x jumper pins, 2.54mm pitch) rotated by 90 degree
2) PE fastons removed
3) Position of power bugs moved by 10.16mm to the top. Sequence changed for optimal power distribution.
4) +5V Stby input changed from power bug to faston, location changed from right side to left (backside view)
5) 23000-040: ADC (automatic Daisy Chain / special connector), 23001-010: EDC (Electronic Automatic Daisy Chain / IC)